Product Catalog for Mining Equipment

CAT. No. 8602-Ⅲ/E

Product Catalog for Mining Equipment

INDEX

	Ref. Page
ULTAGE Series Spherical Roller Bearings [Type EA, Type EM]	P5 ~ 8
ULTAGE Series Spherical Roller Bearings with High-strength Cage [Type EMA]	P9 ~ 10
ULTAGE Series Sealed Spherical Roller Bearings [Type WA]	P11 ~ 12
Bearing Units, Triple-Lip Sealed Bearings for Bearing Units, Plummer Blocks	P13 ~ 14
Bearings for Vertical Roller Mill Coal Pulverizers	P15 ~ 16
Constant Velocity Joints	P17 ~ 18
SL Type Cylindrical Roller Bearings for Sheaves	P19
Bearings with Solid Grease	P20
Size Charts	P21 ~ 38
Bearing Inspection and Maintenance	P39 ~ 46

Related Catalogs

	Cat. No.
Ball and Roller Bearings	2202/E
ULTAGE Series Spherical Roller Bearings [Type EA, Type EM]	3033/E
ULTAGE Series Spherical Roller Bearings with High-strength Cage [Type EMA]	3036/E
ULTAGE Series Sealed Spherical Roller Bearings [Type WA]	3703/E
Solid Grease Bearings	3022/E
Bearing Units	2400/E
Triple-Lip Sealed Bearings for Bearing Units	3905/E
Plummer Blocks	2500/E
Constant Velocity Joints for Industrial Machinery	5603/E
TRI-BALL JOINT Constant Velocity Joints (Small and Medium Size)	5602/E
Care and Maintenance of Bearings	3017/E

The Mining Process

NTN Contributes to the Stable Operation of Mining Equipment

Coal is excavated from mines and transported by loaders and dump trucks, to be subsequently crushed by an array of mining machinery. The bearings used in this machinery are often operating under extreme conditions such as heavy loads, dust, water, etc.. **NTN** provides a premium product, designed to handle the rigors of mining, often resulting in longer operating life and extended maintenance cycles.

Excavating

Draglines

Transport

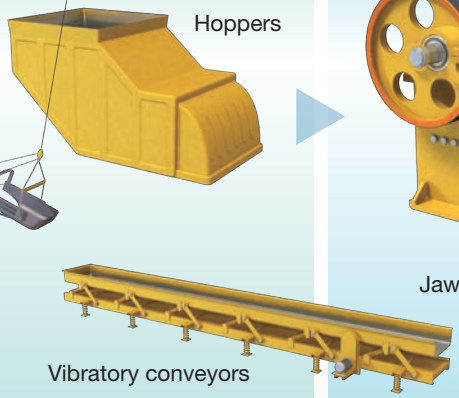

Vibratory conveyors

Crushing

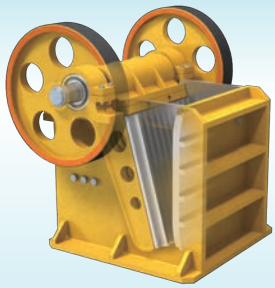

Jaw crushers

Sifting

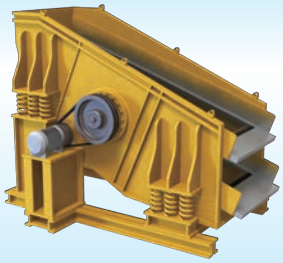

Vibrating screens

Bearing units

Triple-lip sealed bearings for bearing units

ULTAGE series spherical roller bearings [Type EA, Type EM]

Constant velocity joints

ULTAGE series spherical roller bearings with High-strength cage [Type EMA]

Crushing

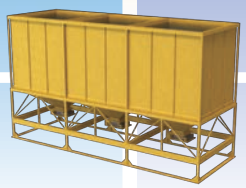

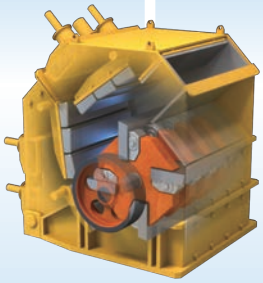

Impact crushers

Grinding

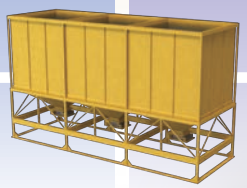

Hoppers, conveyors

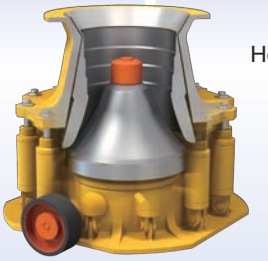

Cone crushers

Shiping

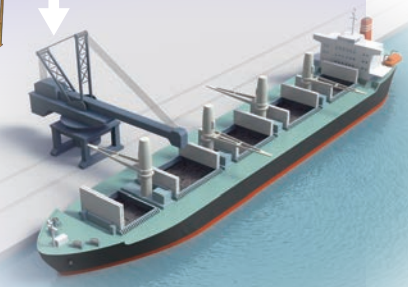

Bulk carriers, shipping

Constant velocity joints

Plummer blocks

Tapered roller bearings

ULTAGE series sealed spherical roller bearings [Type WA]

Triple-lip sealed bearings for bearing units

Bearing units

SL type cylindrical roller bearings for sheaves

ULTAGE

ULTAGE Series

Spherical Roller Bearings

Longer operating life, higher load capacities and higher speed capability provide maximum equipment productivity

Type EA, Type EM

Operating life Up to 5 times longer (compared to **NTN** conventional product)

Allowable speed Up to 20% increase (compared to **NTN** conventional product)

Higher load ratings and speed capability contribute to reduced maintenance costs.

Features (Type EA)

Outer ring	● With oil inlets and oil groove ● Optimal curvature
Rollers	● Larger rollers ● Maximum number of rollers
Inner ring	● No rib reguired ● Optimal curvature
Cage	● Window-type pressed steel cage ● Cage end faces function as guides

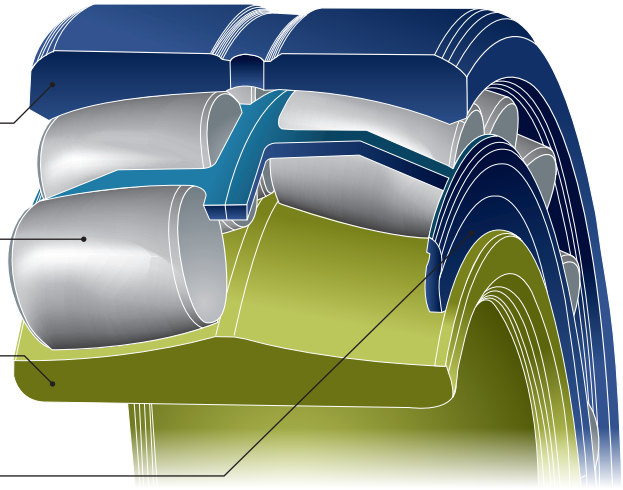

Long operating life

- World's highest standard load capacity (using large diameter rollers)
- Extended maintenance cycle
- Heat resistant to 200˚C (392˚F)

Enhanced high-speed performance

- World's highest standard permitted rotational speed
- Optimized pressed steel cage
- Center guide ring eliminated, now guided by steel cage side face

Improved handling

- Easy to lubricate design

"ULTAGE" (a name created from the combination of **"Ultimate,"** signifying refinement, and **"Stage,"** signifying **NTN**'s intention that this series of products be employed in diverse applications) is the general name for **NTN**'s new generation of bearings that are noted for their industry-leading performance.

● Type EA

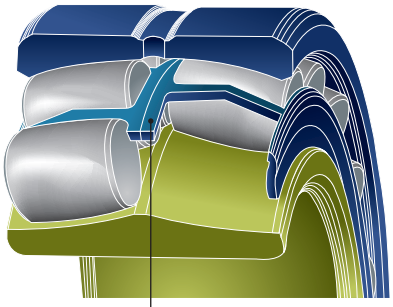

● Type EM

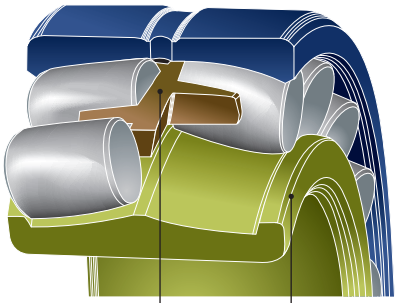

For applications that expose bearings to severe vibration and impact, we recommend Type EM bearings, which incorporate a high-tension brass cage machined from a single piece. (Type EM differs from Type EA in the shape of the inner ring.)

Roller Diameter Comparison

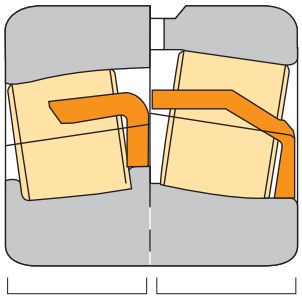

Improved Lubricant Distribution

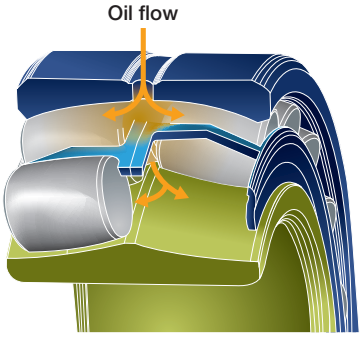

Pressed Steel Cage Design

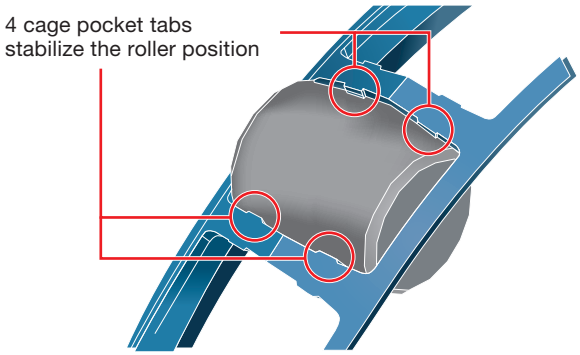

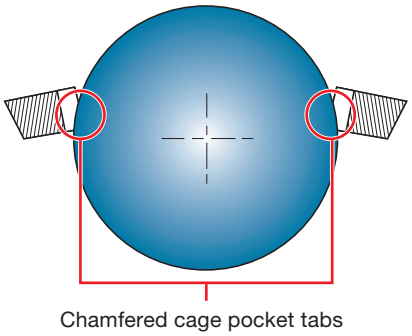

[Allowable Misalignment] ● 0.06 Cr < dynamic equivalent radial load : 0.009 rad (0.5°)
● Dynamic equivalent radial load ≦ 0.06 Cr : 0.035 rad (2°)

✻ If the installed misalignment is greater than recommended, there is a risk of roller/cage protrusion and impact to surrounding components.

Refer to the size charts (p-21)

ULTAGE

ULTAGE Series Spherical Roller Bearings

Higher load capacity and speed contribute to reduced maintenance

Type EA, Type EM

World's Highest Standard High-Load Capacity

By maximizing the roller diameter, the number of rollers and roller design, longer operating life and higher load ratings have been achieved. With this improvement maintenance cycles can be extended.

① Basic Dynamic Load Rating (title) : Up to 65% increase
(compared to **NTN** conventional products)

② Basic Static Load Rating (title) : Up to 35% increase
(compared to **NTN** conventional products)

③ Operating Life (title) : Up to 5 times longer
(compared to **NTN** conventional products)

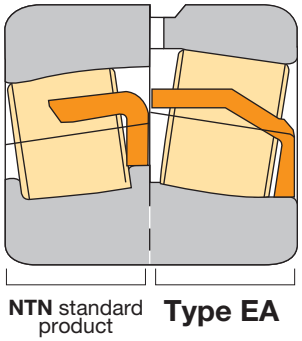

● Comparison of other manufacturer's cataloged basic dynamic load rating values (C_r)
22216 (ø80 × ø140 × 33)

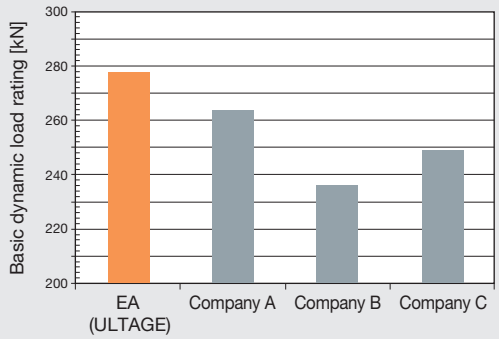

● Comparison of other manufacturer's cataloged basic static load rating values (C_{or})
22216 (ø80 × ø140 × 33)

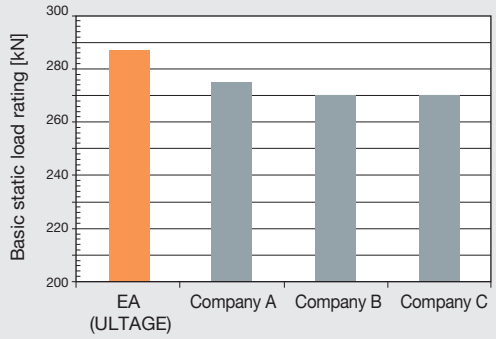

World's Highest Standard Maximum Shaft Speed

Higher operating speeds have been achieved by using an optimized design pressed steel cage.

Limiting Speed : Up to a 20% increase when compared to **NTN** conventional products

The results of comparative testing of bearing temperature rise under circulating oiling conditions show that this bearing suppresses temperature rise at a lower torque compared to other manufacturers' bearings.

● Comparison of other manufacturer's cataloged permitted rotational speeds
22216 (ø80 × ø140 × 33)

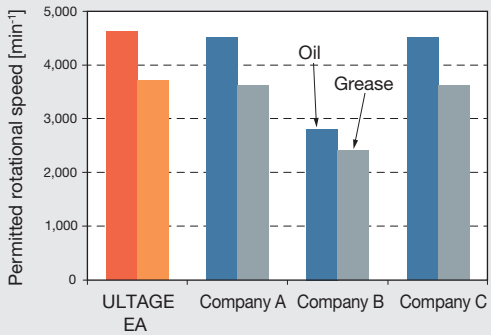

● Temperature rise test results (circulating oiling)
22216 (ø80 × ø140 × 33)

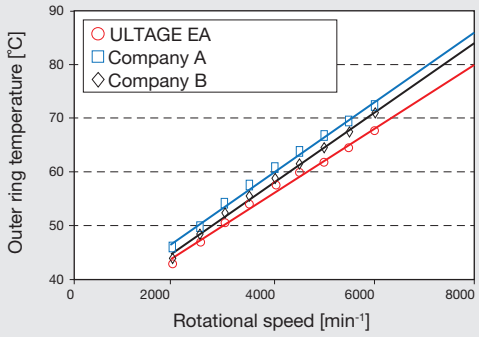

Enhanced Loads : Smaller Bearing

Due to higher load capacity a smaller, lighter weight bearing is used to achieve a longer life.

Model Number	Basic Dynamic Load Rating	Basic Static Load Rating	Primary Dimensions	Mass	Life Ratio
	kN		mm	kg	
22220B	315	415	ø100 × ø180 × 46	4.95	1
22217EA	324	330	ø85 × ø150 × 36	2.59	1.1
			△ 20%	△ 48%	10%

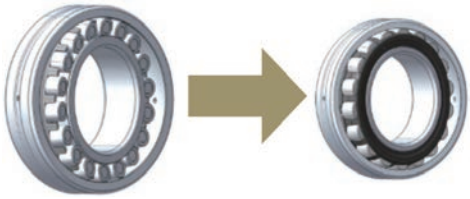

22220B 22217EA

Overall size reduction up to 20%

Mass ratio reduced by 48%

Calculated operating life increased by 10%

Outer Ring Oil Groove/Holes Equipped as Standard

ULTAGE series equipped with oil groove/holes as standard specification. D1 is Japan specification, W33 is Europe specification. (22205, 22206, and 22207 support W33 specification)

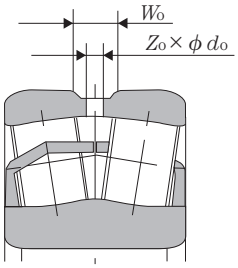

Nominal Bearing Outer dia. mm		No. of Oil Holes	
		D1	W33
Greater Than	Less Than	Z_o	Z_o
–	320	4	3
320	420[1)]	8	3

1) 420 mm is included in this size class.

W_o and d_o differ according to the model number.
Refer to the catalog bearing size charts.

Bearing outer ring outer diameter shape

Do not use the oil holes as position locating pin holes.

Improved Easy Handling

Assembly, disassembly, and re-lubrication have been improved due to the optimized pressed steel cage design.

Minimized roller projection enables quick and easy disassembly, repair and reassembly.

Grease dispersion to rolling surfaces is enhanced.

ULTAGE

ULTAGE Series

Spherical Roller Bearings with Hign-strength Cage

Superior vibration and impact loading resistance contributes to reduced maintenance costs

Type EMA

Operating life Up to 2 times longer (compared to **NTN** conventional product)

Cage strength Up to 55% stronger (compared to **NTN** conventional product)

Features

● High-load capacity design

Longer operating life has been achieved by maximizing the diameter and number of rollers, thereby increasing the load capacities.

Basic dynamic load rating : **Up to 20% increase** (compared to **NTN** conventional products)

Operating life : **Up to 2 times longer** (compared to **NTN** conventional products)

● High-strength cage

Improved retainer strength due to revised staggered pocket cage configuration.

Retainer strength : **Up to 55% increase** (compared to **NTN** conventional products)

● Reduced heat generation

Reduced bearing temperature rise under vibration/ impact load conditions.

Bearing temperature rise : **Up to 10% reduction** (compared to **NTN** conventional products)

● Heat treated up to 200˚C (392˚F) standard

Excellent dimensional stability in high temperature environments contributing to longer operating life by using special heat treatment as standard.

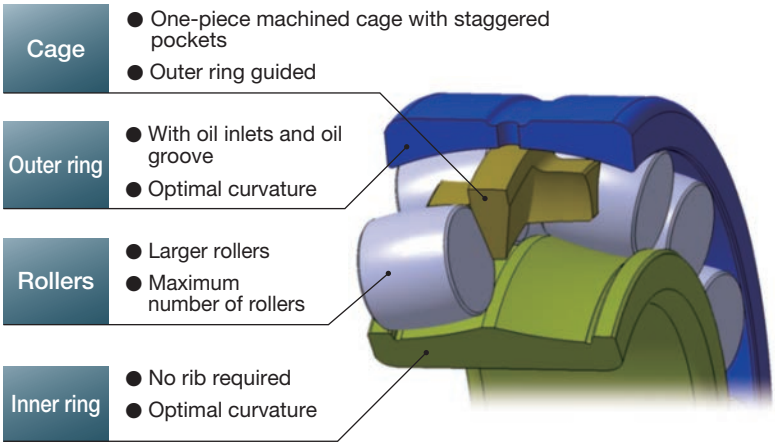

✻ **NTN** conventional product Type UA

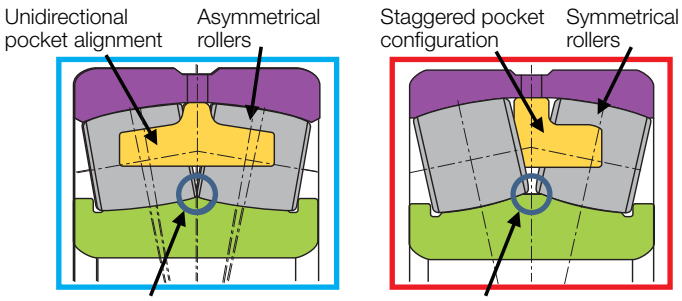

NTN conventional product — Type EMA

Bearing cross-section view

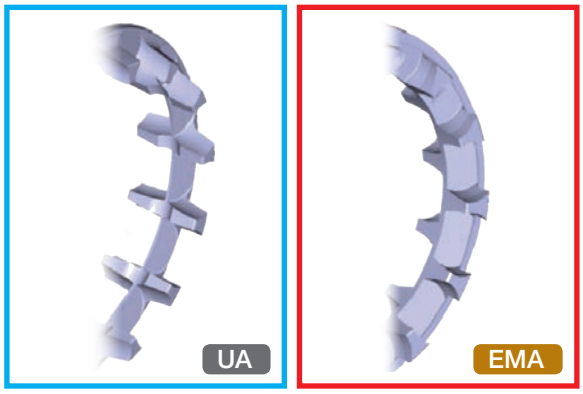

NTN conventional product — Type EMA

3D image of cage

Direct interchange from UA type to EMA type

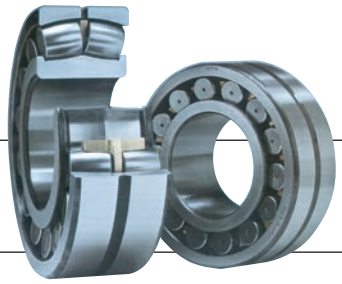

Conventional Type UA

ULTAGE series Type EMA

Heat Generation Test Result Under Heavy Vibration

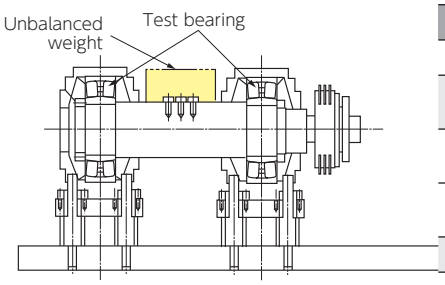

Fig. 1 : Test machine cross section

Test Conditions	
Bearing number	#22316
Vibration acceleration	Up to 10 G
Rotational speed	800 ~ 2400 min^{-1}
Lubrication method	Oil bath lubrication (VG150)
Test equipment	Please see Fig.1

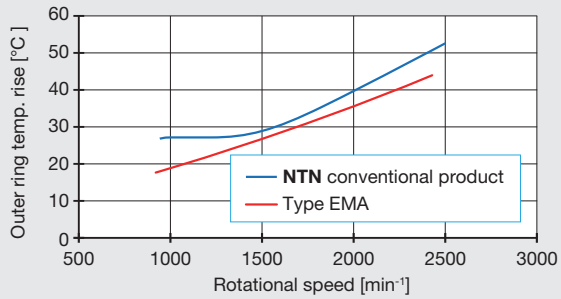

Outer ring temp. rise test results

Cage Strength Analysis

[Test conditions]
Bearing number : #22316
Impact acceleration : 100 G

✻ The cage strength test compares stresses generated by the retainer when a vibration acceleration impact load of 100 G is applied to the bearing.

Bearings	**NTN** Conventional Product	Type EMA
Analysis data	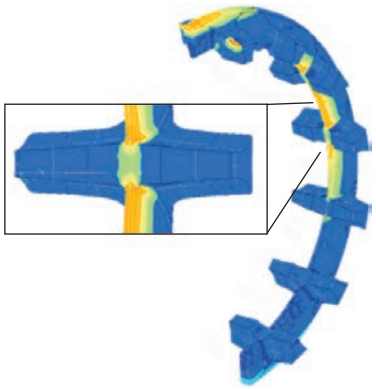	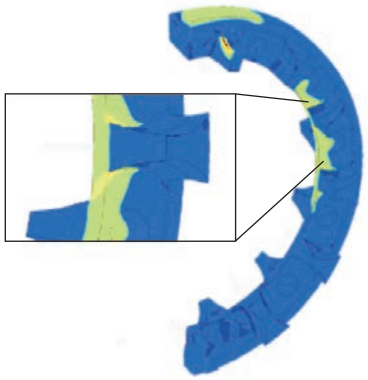
Cage strength	1	1.55

✻ The cage strength value is obtained by assigning a nominal value of 1 to **NTN** conventional products.

Allowable Misalignment

- 0.06 Cr < dynamic equivalent radial load : 0.009 rad (0.5°)
- Dynamic equivalent radial load ≦ 0.06 Cr : 0.035 rad (2°)

✻ If the installed misalignment is greater than recommended, there is a risk of roller/cage protrusion and impact to surrounding components.

Refer to the size charts (p-29)

ULTAGE

ULTAGE Series

Sealed Spherical Roller Bearings

Higher load capacities and speeds contribute to reduced maintenance costs

Type WA

Operating life Up to 5 times longer (compared to **NTN** conventional product)

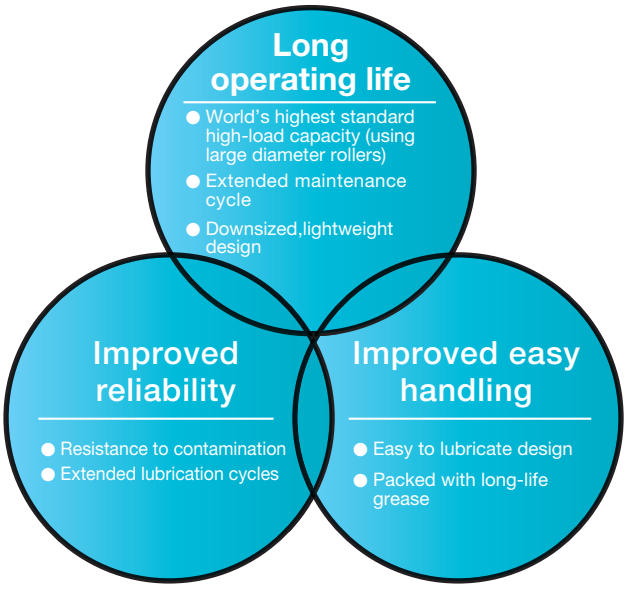

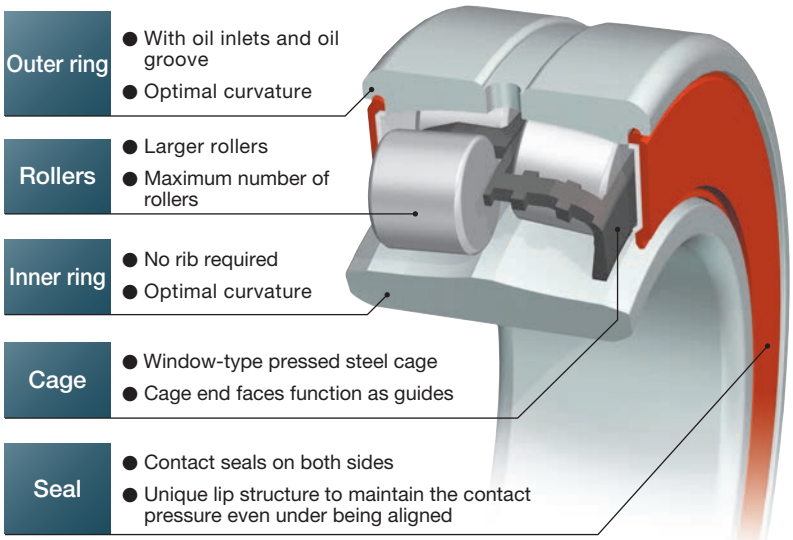

Features

● The industry's highest load capacity

Both a high load capacity and a longer service life are achieved by adopting the internal design of EA type spherical roller bearing which has a significantly increased roller diameter and the maximum number of rollers guided with the window-type pressed steel cage.

● Compact design with minimized volume of seals

Adopt the contact type dust-proof seal with minimized volume.

① Prevent from intrusion of foreign matters with uniquely designed contact type rubber seals.

② Secure the dust-proof capability by maintaining the constant contact pressure of seals even under aligned conditions.

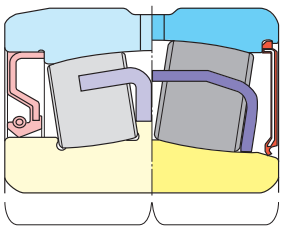

NTN conventional product — Type WA

● Prelubricated with a long life grease as standard

Barings are prelubricated with a long life grease.
No cleaning nor greasing are required when being mounted.

● Oil groove and holes are adopted as standard

Adequate greasing into the inside of the bearing is secured with a lubrication groove and holes on the outside diameter of the outer ring.

Grease flow

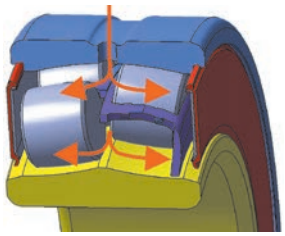

● Compatible with standard plummer blocks

Compatible with standard type SN5, SN2 series. However, the standard stabilizing ring cannot be used when installing to the fixed side. A special width stabilizing ring is required. Contact **NTN** for more information.

Allowable Misalignment	Permissible operating temperature range	Permitted rotational speed	Lubricant grease
● 0.009 rad (0.5°)	● Bearing temperature : −20 to 110°C (−4 to 230°F)	● When lubricating : $dn \leqq 60 \times 10^3$ ● When not lubricating : $dn \leqq 80 \times 10^3$ [dn=d (bearing bore diameter [mm]) × n (operating rotational speed [min^{-1}])]	● Lubricate with lithium based grease containing extreme pressure additives ● Grease pack amount : 15 to 25% of space capacity

ULTAGE series sealed spherical roller bearings [Type WA] is the standard series that has been developed to support long operating life, improved reliability, and enhanced easy handling required by all types of industrial machinery.

Performance Test Results

Temperature rise test

[Test conditions]

Bearing : WA22218EALLSD1
Load : 294 N radial load
Rotational speed : 200 ~ 1400 min^{-1}
Lubricant : Lithium based grease containing extreme pressure additives
Grease pack amount : 20% of space capacity

[Test results]

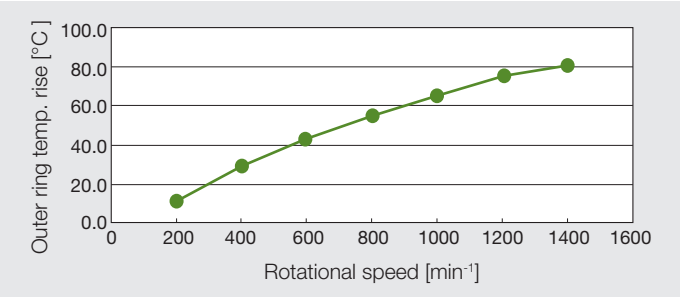

Outer ring temp. rise

[Test results]

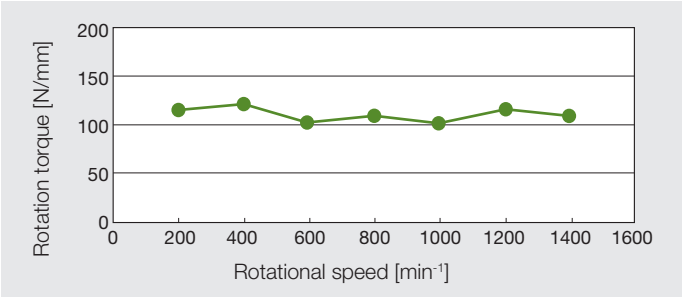

Bearing rotation torque

Noise test

[Test conditions]

Bearing : WA22218EALLSD1
Load : 980 N radial load
Rotational speed : 600, 900, 1200 min^{-1}
Lubricant : Lithium based grease containing extreme pressure additives
Grease pack amount : 20% of space capacity

[Test results]

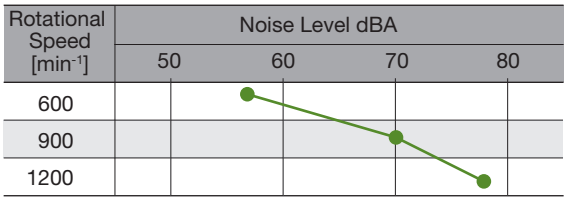

Grease leakage test

[Test conditions]

Bearing : WA22218EALLSD1
Load : 1960 N radial load
Rotational speed : 1000 min^{-1}
Lubricant : Lithium based grease containing extreme pressure additives
Grease pack amount : 20% of space capacity
Operation cycle : 100 hrs.

[Test results]

Grease Leakage Total Amount		
25 h	50 h	100 h
0.47 g	0.58 g	0.63 g

Dust test

[Test conditions]

Bearing : #22216 (Type WA/open type)
Load : 196 N radial load
Rotational speed : 500 min^{-1}
Lubricant : grease
Dust : Coke dust (combined 20wt% with housing internal grease)
Test cycle : 760 hrs. (approx. 1 MTH)

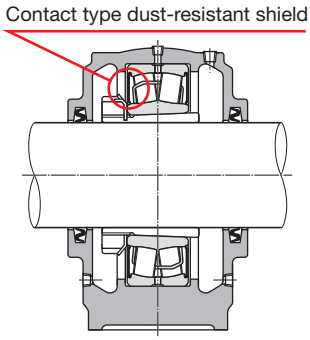

Type WA

No deterioration due to coke dust ingression

Open Type

Deterioration of grease due to coke dust ingression

Refer to the size charts (p-31)

Bearing Units

- Available with dust covers.
- Easy to install/remove.
- Choose from unit with re-lubrication fitting or without.

Bulk material conveyors

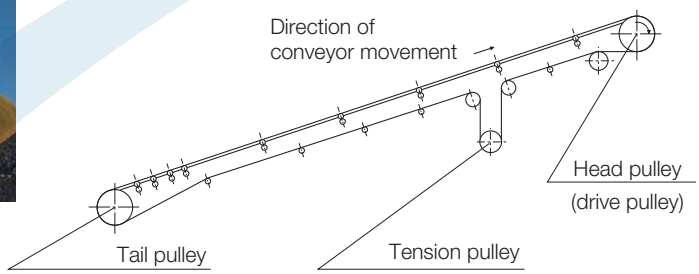

Triple-Lip Sealed Bearings for Bearing Units

- Excellent dust and water-resistance.
- Low-torque and high-torque options.

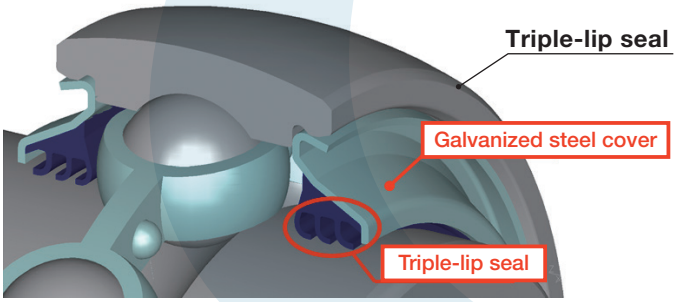

Water-resistance performance test results

[Test conditions]

Bearing	: UC205D1 Standard type, LLJ (low-torque type), LLS (high-torque type)
Rotational speed	: 800 min^{-1}
Load	: None (belt tension only)
Test mode	: Intermittent operation (6 hrs. run / 6 hrs. stop = 1 cycle)
Test equipment	: **NTN** muddy water test equipment
Muddy water specification	: JIS Z8901 Kanto Loam Class 8 Dust to water mixture ratio : 1:10 (ratio by weight)
Quantity of muddy water	: Outer ring immersion degree 1/4 to 1/3
Termination conditions	: Muddy water leakage from bearing, bearing seizure, 0.6 G vibration when operating

[Test results]

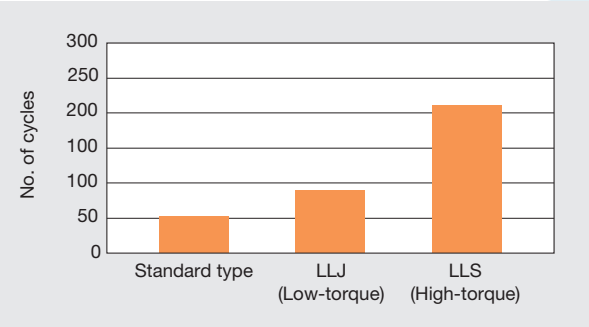

Refer to the size charts (p-33)

Plummer Blocks

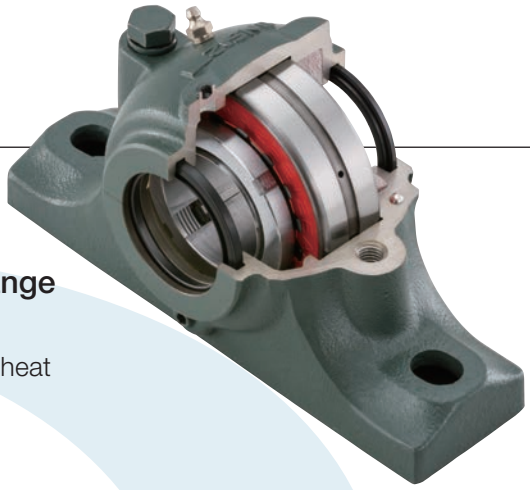

- **Suitable for withstanding impact, vibrations and heavy loads.**
- **Suitable for a broad permissible operating temperature range (–20 to 300˚C (–4 to 572˚F)).**

✻ This is the permissible temperature for the plummer block body. Special heat treatment is required for bearings.

- **Can be used with either grease or oil lubrication.**

Plummer block seal types

Rubber seal

Rubber seals are mainly used for grease lubricating with a guideline permissible circumferential rotation speed of 5-6 m/s.

Felt seals

Felt seals and rubber seals are interchangeable. These can only be used with lubrication grease. Felt seals are not suitable for use in high dust, humidity environments. The guideline permissible circumferential rotation speed for felt seals is approximately 4 m/s.

S-shaped seals

S-shaped seals (synthetic rubber seals w/spring) have excellent sealing performance and are functional with grease and oil-based lubricants (plummer blocks have a special specification). The guideline permissible circumferential rotation speed for S-shaped seals is 10-12 m/s. Caution is required regarding the coarseness and hardness of the shaft especially in the seal contact areas.

Labyrinth seals

Labyrinth rings are easy to install by O-ring attachment and are loosely fitted to flexibly follow the extension and contraction of the shaft (h9 shaft tolerance).

Specially-coated housing are also available

Pulley bearing in extreme contamination conditions (Plummer block)

Bearings for Vertical Roller Mill Coal Pulverizers

Typical design of vertical roller mill coal pulverizer

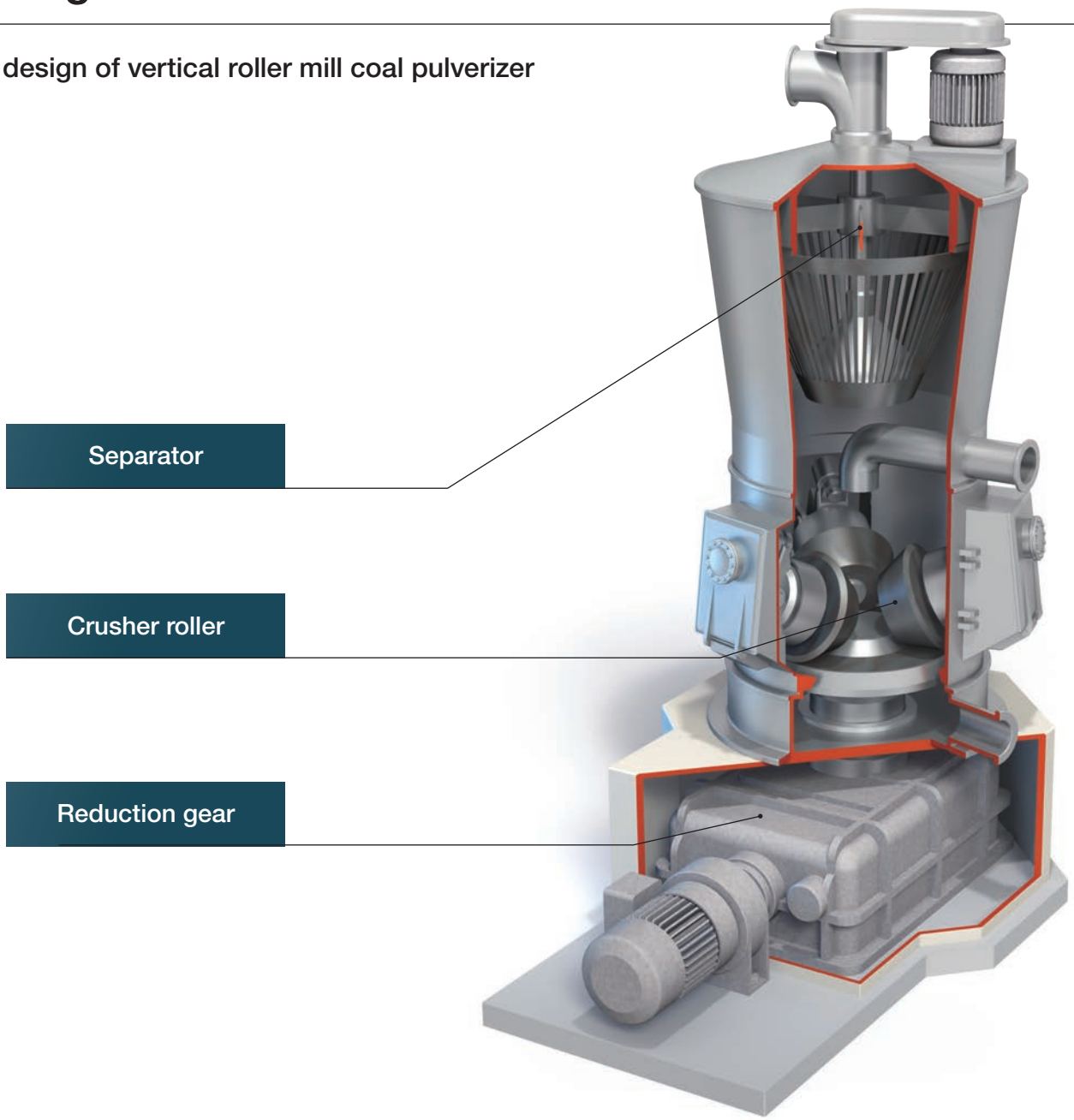

Typical Specifications for Bearings in Crusher Rollers and Separators

Units : mm

Bearing Position		Representative Example 1	Representative Example 2	Representative Example 3
Crusher roller	Fixed side	Spherical roller bearings (ø280 × ø500 × 176)	Spherical roller bearings (ø400 × ø720 × 256)	Spherical roller bearings (ø360 × ø650 × 232)
	Free side	Cylindrical roller bearings (ø280 × ø500 × 165.1)	Cylindrical roller bearings (ø400 × ø720 × 256)	Cylindrical roller bearings (ø360 × ø650 × 232)
Separator	Fixed side	Tapered roller bearings (ø635 × ø850 × 105)	Tapered roller bearings (ø835 × ø1090 × 115)	Tapered roller bearings (ø835 × ø1090 × 115)
	Free side	Cylindrical roller bearings (ø630 × ø850 × 100)	Cylindrical roller bearings (ø830 × ø1040 × 115)	Cylindrical roller bearings (ø830 × ø1040 × 115)

Typical Specifications for Bearings in 3 Step Reduction Gearbox

Units : mm

Bearing Position	Representative Example 1	Representative Example 2
Input shaft	Tapered roller bearings (ø80 × ø170 × 42.5)	Tapered roller bearings (ø90 × ø190 × 46.5)
	Tapered roller bearings (ø90 × ø160 × 42.5)	Tapered roller bearings (ø100 × ø215 × 77.5)
2nd step	Spherical roller bearings (ø100 × ø215 × 73)	Spherical roller bearings (ø120 × ø260 × 86)
	Spherical roller bearings (ø100 × ø215 × 73)	Cylindrical roller bearing (ø120 × ø260 × 86)
Output shaft	Spherical roller bearings (ø130 × ø280 × 93)	Spherical roller bearings (ø140 × ø300 × 102)
	Spherical roller bearings (ø150 × ø320 × 108)	Spherical roller bearings (ø160 × ø340 × 114)
Thrust shaft	Thrust cylindrical roller bearings (ø360 × ø560 × 120)	Thrust cylindrical roller bearings (ø440 × ø740 × 150)

Typical Specifications for Bearings in Planetary Gearbox

Units : mm

Bearing Position	Representative Example 1	Representative Example 2	Representative Example 3	Representative Example 4
Pinion (motor side)	Double row tapered roller bearings (ø180 × ø380 × 158)	Double row tapered roller bearings (ø170 × ø360 × 160)	Double row tapered roller bearings (ø210 × ø480 × 230)	Double row tapered roller bearings (ø190 × ø350 × 135)
Pinion (gear side)	Spherical roller bearings (ø200 × ø340 × 140)	Spherical roller bearings (ø190 × ø320 × 128)	Spherical roller bearings (ø220 × ø370 × 150)	Spherical roller bearings (ø200 × ø340 × 140)
Bevel gear flange	Double row tapered roller bearings (ø240 × ø360 × 115)	Tapered roller bearings (ø220 × ø340 × 76)	Tapered roller bearings (ø220 × ø340 × 76)	Tapered roller bearings (ø220 × ø340 × 76)
Coupling gear	Spherical roller bearings (ø400 × ø540 × 106)	Spherical roller bearings (ø360 × ø480 × 90)	Spherical roller bearings (ø400 × ø540 × 106)	Spherical roller bearings (ø400 × ø540 × 106)
Planetary gear	Spherical roller bearings (ø240 × ø400 × 128)	Spherical roller bearings (ø200 × ø340 × 140)	Spherical roller bearings (ø220 × ø370 × 150)	Spherical roller bearings (ø440 × ø720 × 280)
Output shaft	Slide bearing (metal)	Cylindrical roller bearings (ø460 × ø680 × 100)	Slide bearing (metal)	Slide bearing (metal)
Thrust	Thrust cylindrical roller bearings (ø1110 × ø1750 × 220)	Thrust cylindrical roller bearings (ø1105 × ø1600 × 175)	Thrust cylindrical roller bearings (ø1510 × ø2100 × 240)	Thrust cylindrical roller bearings (ø945 × ø1520 × 220)

Constant Velocity Joints

Superior performance of constant velocity joints

No lubrication required	Boot-sealed to enable operation for prolonged periods without lubricating.
Low vibration/noise efficient rotation	They ensure high quality manufacturing due to their low vibration/noise and efficient rotation (constant velocity rotation) compared to other couplings.
Ambient environment	They are boot-sealed. Therefore, there is no loss of grease and clean environments can be maintained.
Easy handling	They are easy to handle because, unlike cross-joints, they require no left-right angle/phase matching or centering during installation.
Safety	Constant velocity joints are covered by a boot. Therefore, they are safe to handle without risk of trapping fingers in cross-joint yokes.

Constant velocity joints

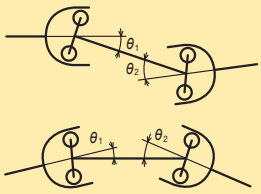

By using only a single joint
$\theta_1 \neq \theta_2$ is allowed
Phase matching is not required

Cross-joint

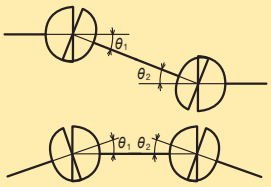

By using a pair of joints
$\theta_1 = \theta_2$ is allowed
Phase matching is required

BJ

BJ disc type

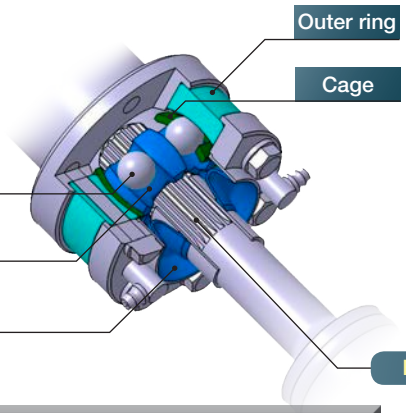

- Excellent high-speed rotation performance
- Max. permitted angle : 14-18°

BJ cup type

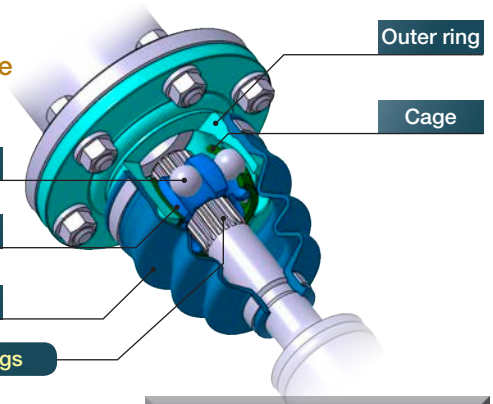

Extendable by spline couplings

- Max. permitted angle : 25°
- Excellent seal performance

DOJ/BC couplings

DOJ

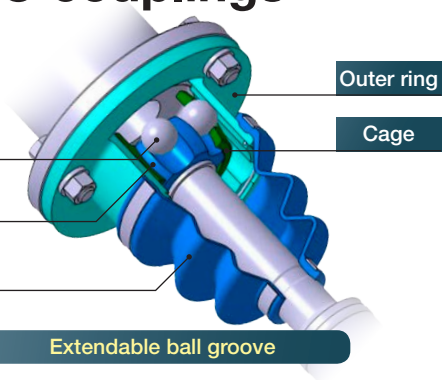

Extendable ball groove

- Extendable inside the joint while under torque load
- Max. permitted angle : 68 to 200 size: 20°
  225 to 625 size : 8 to 10°

BC coupling

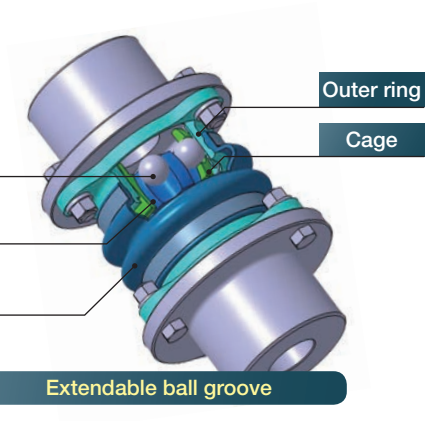

Extendable ball groove

- No need to center/easy to install
- Max. permitted angle : 5°
- Extendable inside main body

BC coupling

BC couplings manufactured by **NTN** can be used in replacement of general couplings.❶
Take a closer look at the easy installation/removal characteristics, degree of angular deflection, and eccentricity that these BC couplings can provide.

Chain coupling | Gear coupling | Disc coupling | Rubber coupling

By substituting with BC couplings...

Replacement

BC coupling

No centering required
Improve work efficiency, reduce maintenance man-hours

No lubrication required
Boot-sealed to enable operation for prolonged periods without lubricating.

Absorb vibration

Comparison of coupling types (50 mm bore dia. comparison)

Coupling Function	Chain Coupling	Gear Coupling	Disc Coupling	Rubber Coupling	NTN BC Couplings
Permissible angle of deflection (°)	1.0	1.5	1.0	0.3	5.0
Permissible degree of eccentricity (mm)	0.4	1.0	0.2	0.2	5.0
Permissible torque (N•m)	932	932	775	490	932
Permissible distance between shafts (mm)	12	8	12	3	103
Outer dia. (mm)	130	140	143	120	134
Weight (kg)	6.2	7.5	6.9	6.7	8.5
Independent installation and removal	Not permissible	Not permissible	Not permissible	Not permissible	Permissible
Maintenance	Time required for centering				No centering or re-lubrication required

❶ Replacement may not be possible depending on conditions. Check the conditions and location of use. Contact **NTN** for technical support.

Typical Specifications for Constant Velocity Joints in Mining Equipment

Use Machinery	CVJ Position	Part Number
Vibrating screens (oscillators) Representative example 1	Drive rolls	**BJ100ACC9 · ·**
Vibrating screens (oscillators) Representative example 2	Drive rolls	**BJ100ACC9 · ·**
	No. 5 intermediate rolls	**BJ100ACC9 · ·**
Vibrating screens (oscillators) Representative example 3	Drive rolls	**BJ125ACC9 · ·**
	No. 5 intermediate rolls	**BJ125ACC9 · ·**
	No. 6 intermediate rolls	**BJ125ACC9 · ·**
	No. 7 intermediate rolls	**BJ125ACC9 · ·**
Shuttle cars	Wheel drive units	**BJ200ACB0 · ·**
Rod mills	Drive transmission units	**DOJ550F0 · ·**

Note : Part number suffixes are serial numbers.

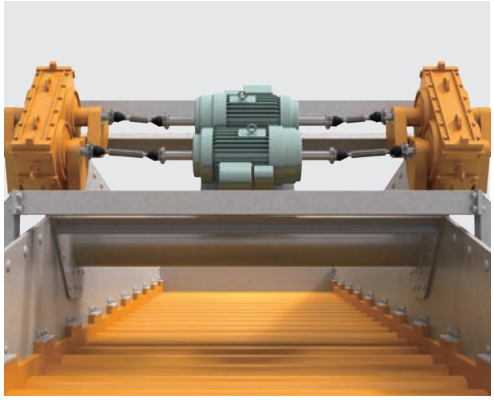

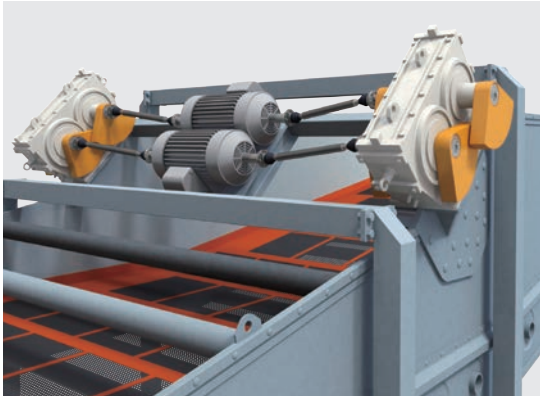

SL Type Cylindrical Roller Bearings for Sheaves

Optimal bearings for ultra-low speed, heavy loads, and impact loads.

Features

Thin section design

- Smaller
- Lighter

Thrust load handling capability

- Optimal rib design
- Improved roller precision

Non-separable type

- Separable by special construction method
- Lockable after roller installation

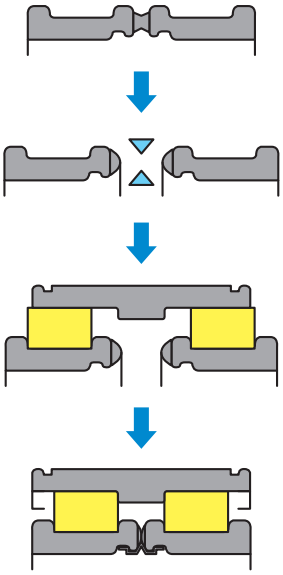

Full complement roller bearings

- Maximum number of rollers

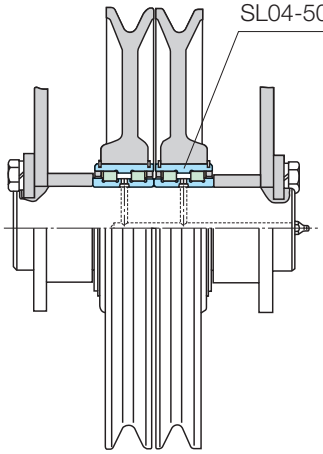

Installation example

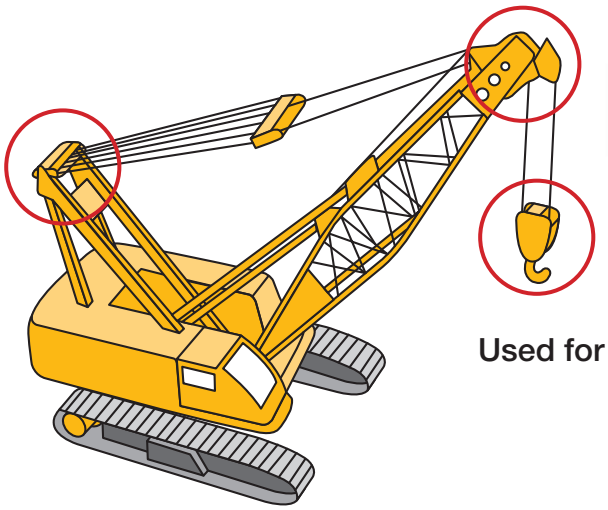

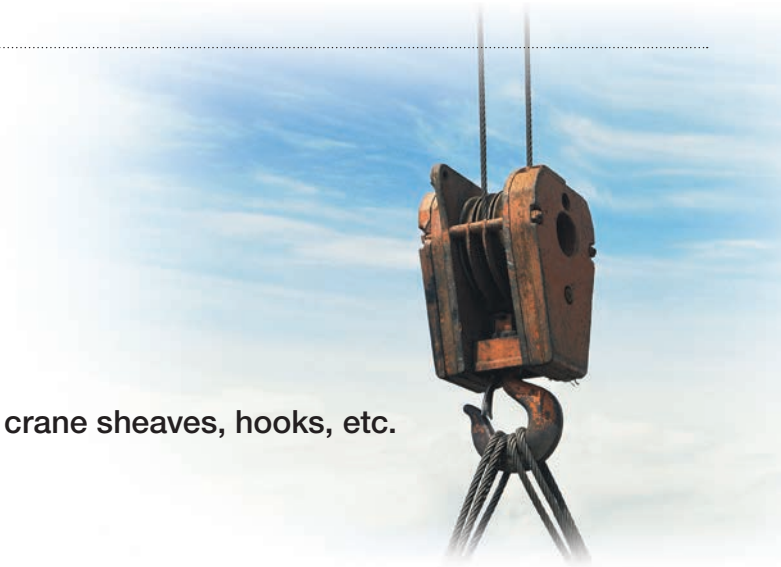

Used for crane sheaves, hooks, etc.

Refer to the size charts (p-35)

Bearings with Solid Grease

Extended maintenance cycles due to reduced grease leakage and resistance to emulsification with water.

Features

- Resistant to grease leakage due to centrifugal forces.
- Prevents contamination of ambient environment.
- Long operating life due to resistance against emulsification and leakage.

Bearing Specification

Main ingredients and permissible operating temperature range

Solid Grease (product code)	Resin	Lubricant	Permissible Operating Temperature Range
General-purpose Solid Grease (LP03)	Ultra high molecular weight polyethylene	Li–mineral oil grease	–20~80℃ (–4~194℉) max. 60℃ (140℉) at regular operation conditions

Production range

Solid Grease bearing for general use (LP03)

○: Standard type △: Special type ×: Not available

Bearing configuration	Lubricant Packing Specification		Production Sizes (bearing outer dia. dimensions)
	Spot-pack	Full-pack	
Deep groove ball bearings	○❶	△	Up to 350 mm dia.
Miniature/small dia. ball bearings	○❶	×	(Bearing inside diameter : 6 to 9 mm)
Self-aligning ball bearings	×	○❶	Up to 250 mm dia.
Spherical roller bearings	×	○❶	Up to 250 mm dia.
Bearing units	○❶	△	Up to 300 mm dia.
Needle roller bearings	×	○❷	❷

❶ Deep groove ball bearings are equipped with spot-pack, ZZ shields as standard. Certain bearing configurations and model numbers listed as standard specification are not available. Contact **NTN** for further information.
❷ Available dimensions of the needle roller bearings differ for each bearing configuration. Contact **NTN** for further information.
Note : Standard bearings are not manufactured from corrosion resistant materials. However, stainless steel bearings are also available.

Spot-pack

Deep groove ball bearings

Bearing units

Full-pack

Needle roller bearings

Spherical roller bearings

Limiting speed

Solid grease for general use (LP03)

Bearing Configuration	Loading Condition	Permitted Rotational Speed (dn value)❶	
		Spot-pack	Full-pack
Deep groove ball bearings	Radial load	200×10^3	50×10^3
Miniature/small dia. ball bearings	Radial load	200×10^3	—
Self-aligning ball bearings	Radial load	—	30×10^3
Spherical roller bearings	Radial load	—	30×10^3
Bearing units	Radial load	120×10^3	30×10^3
Needle roller bearings	Radial load	—	30×10^3 ❷

❶ dn value : [$dn = d$ (bearing bore diameter [mm]) × n (operating rotational speed [min^{-1}])]
❷ $Fw{\cdot}n$ value : [$Fw{\cdot}n = Fw$ (roller bearing bore dia. [mm]) × n (operating rotational speed [min^{-1}])

Minimum required load

In case of full-pack, in order for the rolling elements to rotate without sliding, at least approximately 1% of the basic dynamic load rating is required. Contact **NTN** for more information.

ULTAGE

ULTAGE Series Spherical Roller Bearings [Type EA, Type EM]

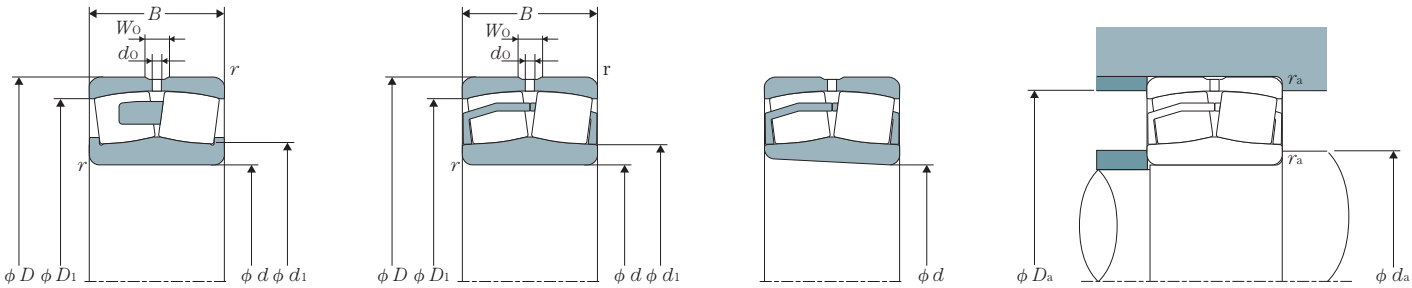

Cylindrical bore (Type EM) Cylindrical bore (Type EA) Tapered bore (Type EA)

Basic Dimensions						Basic Dynamic Load Rating	Basic Static Load Rating	Basic Dynamic Load Rating	Basic Static Load Rating	Permitted Rotational Speed	
mm						kN		kgf		min^{-1}	
d	D	B	$r_{s\,min}$②	Wo	do	Cr	Cor	Cr	Cor	Grease Lubrication	Oil Lubrication
25	52	18	1	3	1.5	57.3	46.1	5 840	4 700	10 400	13 000
	52	18	1	3	1.5	57.3	46.1	5 840	4 700	10 400	13 000
30	62	20	1	4	2	75.7	64.5	7 720	6 580	8 800	11 000
	62	20	1	4	2	75.7	64.5	7 720	6 580	8 800	11 000
35	72	23	1.1	5	2	100	92	10 200	9 380	7 500	9 400
	72	23	1.1	5	2	100	92	10 200	9 380	7 500	9 400
40	80	23	1.1	5	2.5	116	105	11 800	10 700	6 800	8 500
	80	23	1.1	5	2.5	110	98	11 200	10 000	6 800	8 500
	90	33	1.5	6	3	169	152	17 200	15 500	5 400	6 600
	90	33	1.5	6	3	169	152	17 200	15 500	5 400	6 600
45	85	23	1.1	6	2.5	121	113	12 300	11 500	6 100	7 700
	85	23	1.1	6	2.5	116	106	11 800	10 800	6 100	7 700
	100	36	1.5	6	3	206	187	21 000	19 100	4 600	5 700
	100	36	1.5	6	3	206	187	21 000	19 100	4 600	5 700
50	90	23	1.1	6	2.5	130	124	13 300	12 600	5 700	7 200
	90	23	1.1	6	2.5	125	117	12 700	11 900	5 700	7 200
	110	40	2	7	3.5	250	232	25 400	23 700	4 300	5 300
	110	40	2	7	3.5	250	232	25 400	23 700	4 300	5 300
55	100	25	1.5	6	3	155	148	15 800	15 100	5 300	6 700
	100	25	1.5	6	3	148	140	15 100	14 300	5 300	6 700
	120	43	2	8	3.5	296	274	30 200	28 000	3 900	4 800
	120	43	2	8	3.5	296	274	30 200	28 000	3 900	4 800
60	110	28	1.5	7	3	187	181	19 100	18 400	4 800	6 000
	110	28	1.5	7	3	179	171	18 300	17 400	4 800	6 000
	130	46	2.1	9	4	340	319	34 700	32 600	3 600	4 600
	130	46	2.1	9	4	340	319	34 700	32 600	3 600	4 600
65	120	31	1.5	8	3.5	226	224	23 100	22 900	4 400	5 500
	120	31	1.5	8	3.5	217	212	22 100	21 600	4 400	5 500
	140	48	2.1	9	4	369	343	37 600	35 000	3 300	4 100
	140	48	2.1	9	4	369	343	37 600	35 000	3 300	4 100
70	125	31	1.5	7	3.5	235	240	24 000	24 400	4 100	5 200
	125	31	1.5	7	3.5	235	240	24 000	24 400	4 100	5 200
	150	51	2.1	10	5	420	396	42 800	40 400	3 000	3 800
	150	51	2.1	10	5	420	396	42 800	40 400	3 000	3 800
75	130	31	1.5	7	3.5	244	249	24 800	25 400	4 000	5 000
	130	31	1.5	7	3.5	244	249	24 800	25 400	4 000	5 000
	160	55	2.1	10	5	491	467	50 100	47 600	2 900	3 600
	160	55	2.1	10	5	491	467	50 100	47 600	2 900	3 600
80	140	33	2	8	3.5	278	287	28 400	29 300	3 700	4 600
	140	33	2	8	3.5	267	272	27 300	27 700	3 700	4 600
	170	58	2.1	10	5	541	522	55 200	53 200	2 700	3 400
	170	58	2.1	10	5	541	522	55 200	53 200	2 700	3 400
85	150	36	2	8	3.5	324	330	33 000	33 600	3 400	4 300
	150	36	2	8	3.5	324	330	33 000	33 600	3 400	4 300
	180	60	3	11	5	599	604	61 100	61 600	2 600	3 200
	180	60	3	11	5	599	604	61 100	61 600	2 600	3 200

① Items marked 'K' indicate bearings with a bore taper ratio of 1/12. ② Indicates the minimum permissible chamfer dimension r.

Dynamic equivalent radial load

$P_r = XF_r + YF_a$

$\frac{F_a}{F_r} \leqq e$		$\frac{F_a}{F_r} > e$	
X	Y	X	Y
1	Y_1	0.67	Y_2

Static equivalent radial load

$P_{or} = F_r + Y_o F_a$

e, Y_1, Y_2 and Y_o are obtained from the tables below.

Bearing Number

222 16 EA K D1 C3

- C3: Internal clearance code
- D1: Lubricant groove/hole code
- K: Raceway shape code : K, no code
- EA: Bearing type code : EA, EM
- 16: Inner diameter number
- 222: Bearing series (type code + width series code + dia. series code.)

Part Number		Installation Dimensions					Constant	Axial Load Coefficient			Mass (Ref.) kg	
Cylindrical Bore	Tapered Bore①	d_1	$d_{a\,min}$	$D_{a\,max}$	D_1	$r_{as\,max}$	e	Y_1	Y_2	Y_O	Cylindrical Bore	Tapered Bore
22205EAW33	22205EAKW33	30	30	46	46	1	0.34	2.00	2.98	1.96	0.173	0.169
22205EMW33	22205EMKW33	30	30	46	46	1	0.34	2.00	2.98	1.96	0.174	0.171
22206EAW33	22206EAKW33	37	36	56	55	1	0.31	2.15	3.20	2.10	0.278	0.272
22206EMW33	22206EMKW33	37	36	56	55	1	0.31	2.15	3.20	2.10	0.281	0.275
22207EAW33	22207EAKW33	45	42	65	63	1.1	0.31	2.21	3.29	2.16	0.438	0.430
22207EMW33	22207EMKW33	45	42	65	63	1.1	0.31	2.21	3.29	2.16	0.442	0.433
22208EAD1	22208EAKD1	50	47	73	71	1.1	0.27	2.47	3.67	2.41	0.528	0.518
22208EMD1	22208EMKD1	50	47	73	71	1.1	0.27	2.47	3.67	2.41	0.529	0.519
22308EAD1	22308EAKD1	52	49	81	78	1.5	0.36	1.87	2.79	1.83	1.02	1.00
22308EMD1	22308EMKD1	52	49	81	78	1.5	0.36	1.87	2.79	1.83	1.03	1.01
22209EAD1	22209EAKD1	54	52	78	76	1.1	0.26	2.64	3.93	2.58	0.572	0.561
22209EMD1	22209EMKD1	54	52	78	76	1.1	0.26	2.64	3.93	2.58	0.577	0.566
22309EAD1	22309EAKD1	58	54	91	87	1.5	0.36	1.90	2.83	1.86	1.37	1.34
22309EMD1	22309EMKD1	58	54	91	87	1.5	0.36	1.90	2.83	1.86	1.38	1.35
22210EAD1	22210EAKD1	59	57	83	81	1.1	0.24	2.84	4.23	2.78	0.614	0.602
22210EMD1	22210EMKD1	59	57	83	81	1.1	0.24	2.84	4.23	2.78	0.616	0.604
22310EAD1	22310EAKD1	63	61	99	95	2	0.36	1.87	2.79	1.83	1.82	1.79
22310EMD1	22310EMKD1	63	61	99	95	2	0.36	1.87	2.79	1.83	1.84	1.80
22211EAD1	22211EAKD1	66	64	91	90	1.5	0.23	2.95	4.40	2.89	0.830	0.814
22211EMD1	22211EMKD1	66	64	91	90	1.5	0.23	2.95	4.40	2.89	0.827	0.811
22311EAD1	22311EAKD1	68	66	109	104	2	0.36	1.87	2.79	1.83	2.31	2.26
22311EMD1	22311EMKD1	68	66	109	104	2	0.36	1.87	2.79	1.83	2.34	2.29
22212EAD1	22212EAKD1	71	69	101	99	1.5	0.24	2.84	4.23	2.78	1.14	1.12
22212EMD1	22212EMKD1	71	69	101	99	1.5	0.24	2.84	4.23	2.78	1.15	1.13
22312EAD1	22312EAKD1	75	72	118	113	2.1	0.35	1.95	2.90	1.91	2.86	2.80
22312EMD1	22312EMKD1	75	72	118	113	2.1	0.35	1.95	2.90	1.91	2.91	2.85
22213EAD1	22213EAKD1	78	74	111	107	1.5	0.24	2.79	4.15	2.73	1.52	1.49
22213EMD1	22213EMKD1	78	74	111	107	1.5	0.24	2.79	4.15	2.73	1.53	1.50
22313EAD1	22313EAKD1	81	77	128	122	2.1	0.33	2.06	3.06	2.01	3.48	3.41
22313EMD1	22313EMKD1	81	77	128	122	2.1	0.33	2.06	3.06	2.01	3.50	3.43
22214EAD1	22214EAKD1	84	79	116	113	1.5	0.22	3.01	4.48	2.94	1.61	1.58
22214EMD1	22214EMKD1	84	79	116	113	1.5	0.22	3.01	4.48	2.94	1.64	1.60
22314EAD1	22314EAKD1	85	82	138	131	2.1	0.34	2.00	2.98	1.96	4.25	4.16
22314EMD1	22314EMKD1	85	82	138	131	2.1	0.34	2.00	2.98	1.96	4.31	4.22
22215EAD1	22215EAKD1	88	84	121	118	1.5	0.22	3.14	4.67	3.07	1.67	1.64
22215EMD1	22215EMKD1	88	84	121	118	1.5	0.22	3.14	4.67	3.07	1.71	1.67
22315EAD1	22315EAKD1	91	87	148	139	2.1	0.34	2.00	2.98	1.96	5.18	5.07
22315EMD1	22315EMKD1	91	87	148	139	2.1	0.34	2.00	2.98	1.96	5.27	5.16
22216EAD1	22216EAKD1	94	91	129	127	2	0.22	3.14	4.67	3.07	2.09	2.05
22216EMD1	22216EMKD1	94	91	129	127	2	0.22	3.14	4.67	3.07	2.11	2.07
22316EAD1	22316EAKD1	98	92	158	148	2.1	0.34	2.00	2.98	1.96	6.12	5.99
22316EMD1	22316EMKD1	98	92	158	148	2.1	0.34	2.00	2.98	1.96	6.28	6.15
22217EAD1	22217EAKD1	100	96	139	137	2	0.22	3.07	4.57	3.00	2.59	2.54
22217EMD1	22217EMKD1	100	96	139	137	2	0.22	3.07	4.57	3.00	2.67	2.62
22317EAD1	22317EAKD1	107	99	166	157	3	0.32	2.09	3.11	2.04	7.18	7.04
22317EMD1	22317EMKD1	107	99	166	157	3	0.32	2.09	3.11	2.04	7.29	7.15

ULTAGE

ULTAGE Series Spherical Roller Bearings [Type EA, Type EM]

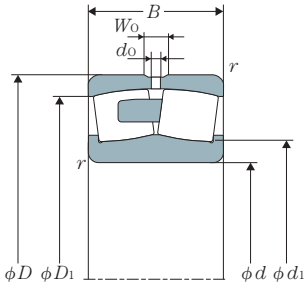

Cylindrical bore (Type EM)

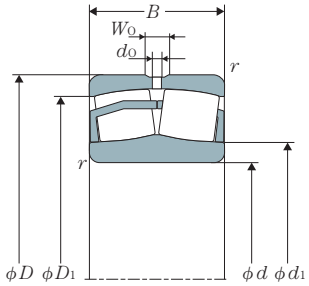

Cylindrical bore (Type EA)

Basic Dimensions mm						Basic Dynamic Load Rating kN	Basic Static Load Rating kN	Basic Dynamic Load Rating kgf	Basic Static Load Rating kgf	Permitted Rotational Speed min^{-1}	
d	D	B	$r_{s\,min}$②	Wo	do	Cr	Cor	Cr	Cor	Grease Lubrication	Oil Lubrication
90	160	40	2	10	4.5	384	398	39 200	40 600	3 200	4 000
	160	40	2	10	4.5	384	398	39 200	40 600	3 200	4 000
	160	52.4	2	9	4	467	513	47 700	52 300	2 600	3 200
	190	64	3	12	5	668	652	68 100	66 400	2 500	3 000
	190	64	3	12	5	668	652	68 100	66 400	2 500	3 000
95	170	43	2.1	10	4.5	416	417	42 400	42 600	3 000	3 800
	170	43	2.1	10	4.5	416	417	42 400	42 600	3 000	3 800
	200	67	3	12	6	732	751	74 600	76 500	2 300	2 800
	200	67	3	12	6	732	751	74 600	76 500	2 300	2 800
100	165	52	2	8	4	464	563	47 300	57 400	2 400	3 000
	165	52	2	8	4	480	590	49 000	60 100	2 400	3 000
	180	46	2.1	11	5	472	495	48 100	50 500	2 800	3 600
	180	46	2.1	11	5	472	495	48 100	50 500	2 800	3 600
	180	60.3	2.1	9	4.5	586	661	59 800	67 400	2 300	2 900
	215	73	3	13	6	827	844	84 300	86 100	2 100	2 600
	215	73	3	13	6	827	844	84 300	86 100	2 100	2 600
110	170	45	2	8	3.5	417	517	42 500	52 700	2 600	3 300
	170	45	2	8	3.5	417	517	42 500	52 700	2 600	3 300
	180	56	2	9	4	547	669	55 800	68 200	2 200	2 800
	180	56	2	9	4	547	669	55 800	68 200	2 200	2 800
	180	69	2	8	4	622	769	63 400	78 400	2 200	2 700
	200	53	2.1	12	6	602	643	61 400	65 600	2 600	3 300
	200	53	2.1	12	6	602	643	61 400	65 600	2 600	3 300
	200	69.8	2.1	11	5	752	869	76 700	88 600	2 100	2 600
	240	80	3	16	7	975	972	99 500	99 100	2 000	2 400
	240	80	3	16	7	975	972	99 500	99 100	2 000	2 400
120	180	46	2	8	3.5	446	577	45 500	58 900	2 400	3 100
	180	46	2	8	3.5	446	577	45 500	58 900	2 400	3 100
	180	60	2	8	3.5	526	726	53 700	74 100	2 100	2 600
	200	62	2	10	4.5	663	820	67 600	83 600	2 000	2 500
	200	62	2	10	4.5	663	820	67 600	83 600	2 000	2 500
	200	80	2	10	4.5	756	991	77 100	101 000	1 900	2 500
	215	58	2.1	12	6	688	753	70 100	76 800	2 400	3 000
	215	58	2.1	12	6	688	753	70 100	76 800	2 400	3 000
	215	76	2.1	11	5	857	998	87 300	102 000	1 900	2 400
	260	86	3	18	8	1 170	1 280	119 000	131 000	1 800	2 200
	260	86	3	18	8	1 170	1 280	119 000	131 000	1 800	2 200
130	200	52	2	9	4	565	721	57 600	73 500	2 200	2 900
	200	52	2	9	4	565	721	57 600	73 500	2 200	2 900
	200	69	2	9	4	682	936	69 600	95 400	1 900	2 400
	210	64	2	10	4.5	710	906	72 400	92 400	1 900	2 400
	210	64	2	10	4.5	710	906	72 400	92 400	1 900	2 400
	210	80	2	10	4.5	803	1 080	81 900	110 000	1 800	2 400
	230	64	3	13	6	808	898	82 400	91 600	2 200	2 800
	230	64	3	13	6	808	898	82 400	91 600	2 200	2 800
	230	80	3	12	5	958	1 130	97 700	115 000	1 700	2 300
	280	93	4	19	9	1 330	1 400	135 000	143 000	1 600	2 000
	280	93	4	19	9	1 330	1 400	135 000	143 000	1 600	2 000

① Items marked 'K' indicate bearings with a bore taper ratio of 1/12, and items marked 'K30' indicate bearings with a bore taper ratio of 1/30. ② Indicates the minimum permissible chamfer dimension r.

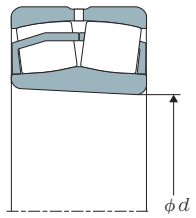

Tapered bore (Type EA)

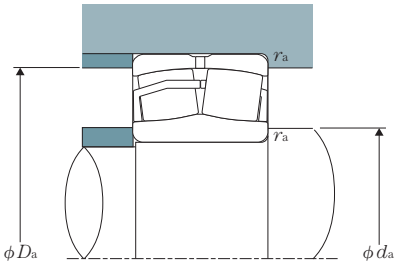

Dynamic equivalent radial load

$P_r = XF_r + YF_a$

$\frac{F_a}{F_r} \leqq e$		$\frac{F_a}{F_r} > e$	
X	Y	X	Y
1	Y_1	0.67	Y_2

Static equivalent radial load

$P_{or} = F_r + Y_o F_a$

e, Y_1, Y_2 and Y_o are obtained from the tables below.

Part Number		Installation Dimensions					Constant	Axial Load Coefficient			Mass (Ref.) kg	
Cylindrical Bore	Tapered Bore®	d_1	$d_{a\,min}$	$D_{a\,max}$	D_1	$r_{as\,max}$	e	Y_1	Y_2	Y_O	Cylindrical Bore	Tapered Bore
22218EAD1	22218EAKD1	105	101	149	144	2	0.23	2.90	4.31	2.83	3.34	3.27
22218EMD1	22218EMKD1	105	101	149	144	2	0.23	2.90	4.31	2.83	3.43	3.37
23218EMD1	23218EMKD1	104	101	149	141	2	0.30	2.25	3.34	2.20	4.43	4.31
22318EAD1	22318EAKD1	110	104	176	166	3	0.33	2.06	3.06	2.01	8.42	8.25
22318EMD1	22318EMKD1	110	104	176	166	3	0.33	2.06	3.06	2.01	8.53	8.35
22219EAD1	22219EAKD1	110	107	158	153	2.1	0.23	2.95	4.40	2.89	3.98	3.90
22219EMD1	22219EMKD1	110	107	158	153	2.1	0.23	2.95	4.40	2.89	4.06	3.98
22319EAD1	22319EAKD1	120	109	186	174	3	0.32	2.09	3.11	2.04	9.91	9.71
22319EMD1	22319EMKD1	120	109	186	174	3	0.32	2.09	3.11	2.04	10.0	9.82
23120EAD1	23120EAKD1	114	111	154	147	2	0.28	2.39	3.56	2.34	4.37	4.24
23120EMD1	23120EMKD1	114	111	154	147	2	0.28	2.39	3.56	2.34	4.45	4.32
22220EAD1	22220EAKD1	118	112	168	161	2.1	0.24	2.84	4.23	2.78	4.90	4.80
22220EMD1	22220EMKD1	118	112	168	161	2.1	0.24	2.84	4.23	2.78	5.02	4.93
23220EMD1	23220EMKD1	118	112	168	159	2.1	0.31	2.18	3.24	2.13	6.51	6.33
22320EAD1	22320EAKD1	127	114	201	187	3	0.34	1.98	2.94	1.93	12.6	12.3
22320EMD1	22320EMKD1	127	114	201	187	3	0.34	1.98	2.94	1.93	12.9	12.7
23022EAD1	23022EAKD1	123	119	161	155	2	0.23	2.95	4.40	2.89	3.66	3.55
23022EMD1	23022EMKD1	123	119	161	155	2	0.23	2.95	4.40	2.89	3.66	3.55
23122EAD1	23122EAKD1	125	121	169	161	2	0.28	2.43	3.61	2.37	5.66	5.49
23122EMD1	23122EMKD1	125	121	169	161	2	0.28	2.43	3.61	2.37	5.53	5.36
24122EMD1	24122EMK30D1	121	121	169	158	2	0.36	1.90	2.83	1.86	6.75	6.65
22222EAD1	22222EAKD1	130	122	188	179	2.1	0.25	2.69	4.00	2.63	7.10	6.95
22222EMD1	22222EMKD1	130	122	188	179	2.1	0.25	2.69	4.00	2.63	7.30	7.15
23222EMD1	23222EMKD1	130	122	188	176	2.1	0.32	2.12	3.15	2.07	9.41	9.14
22322EAD1	22322EAKD1	139	124	226	209	3	0.32	2.09	3.11	2.04	17.0	16.6
22322EMD1	22322EMKD1	139	124	226	209	3	0.32	2.09	3.11	2.04	17.4	17.1
23024EAD1	23024EAKD1	134	129	171	165	2	0.22	3.14	4.67	3.07	4.02	3.90
23024EMD1	23024EMKD1	134	129	171	165	2	0.22	3.14	4.67	3.07	4.02	3.90
24024EMD1	24024EMK30D1	132	129	171	161	2	0.29	2.32	3.45	2.26	5.28	5.21
23124EAD1	23124EAKD1	138	131	189	179	2	0.28	2.43	3.61	2.37	7.72	7.49
23124EMD1	23124EMKD1	138	131	189	179	2	0.28	2.43	3.61	2.37	7.77	7.54
24124EMD1	24124EMK30D1	136	131	189	173	2	0.37	1.84	2.74	1.80	10.0	9.87
22224EAD1	22224EAKD1	141	132	203	193	2.1	0.25	2.74	4.08	2.68	8.88	8.68
22224EMD1	22224EMKD1	141	132	203	193	2.1	0.25	2.74	4.08	2.68	9.01	8.82
23224EMD1	23224EMKD1	139	132	203	190	2.1	0.32	2.09	3.11	2.04	11.7	11.3
22324EAD1	22324EAKD1	156	134	246	225	3	0.32	2.09	3.11	2.04	22.3	21.9
22324EMD1	22324EMKD1	156	134	246	225	3	0.32	2.09	3.11	2.04	22.7	22.2
23026EAD1	23026EAKD1	145	139	191	183	2	0.22	3.01	4.48	2.94	5.88	5.71
23026EMD1	23026EMKD1	145	139	191	183	2	0.22	3.01	4.48	2.94	5.90	5.73
24026EMD1	24026EMK30D1	143	139	191	178	2	0.31	2.20	3.27	2.15	7.82	7.71
23126EAD1	23126EAKD1	148	141	199	189	2	0.27	2.51	3.74	2.45	8.45	8.19
23126EMD1	23126EMKD1	148	141	199	189	2	0.27	2.51	3.74	2.45	8.51	8.25
24126EMD1	24126EMK30D1	146	141	199	183	2	0.34	1.96	2.92	1.92	10.7	10.5
22226EAD1	22226EAKD1	151	144	216	206	3	0.25	2.69	4.00	2.63	11.0	10.7
22226EMD1	22226EMKD1	151	144	216	206	3	0.25	2.69	4.00	2.63	11.1	10.9
23226EMD1	23226EMKD1	150	144	216	203	3	0.32	2.12	3.15	2.07	13.8	13.4
22326EAD1	22326EAKD1	164	147	263	243	4	0.33	2.06	3.06	2.01	27.2	26.6
22326EMD1	22326EMKD1	164	147	263	243	4	0.33	2.06	3.06	2.01	28.0	27.5

ULTAGE

ULTAGE Series Spherical Roller Bearings [Type EA, Type EM]

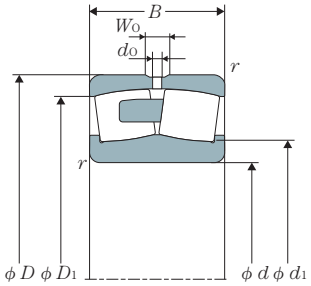

Cylindrical bore (Type EM)

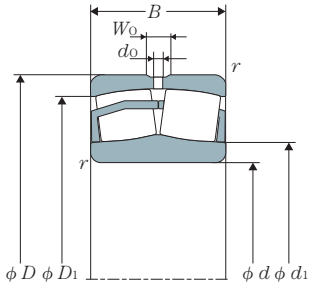

Cylindrical bore (Type EA)

Basic Dimensions mm						Basic Dynamic Load Rating kN	Basic Static Load Rating kN	Basic Dynamic Load Rating kgf	Basic Static Load Rating kgf	Permitted Rotational Speed min^{-1}	
d	D	B	$r_{s\,min}$②	Wo	do	Cr	Cor	Cr	Cor	Grease Lubrication	Oil Lubrication
140	210	53	2	9	4	597	783	60 900	79 800	2 100	2 700
	210	53	2	9	4	597	783	60 900	79 800	2 100	2 700
	210	69	2	9	4	709	990	72 300	101 000	1 800	2 200
	225	68	2.1	11	5	802	1 030	81 800	105 000	1 800	2 200
	225	68	2.1	11	5	802	1 030	81 800	105 000	1 800	2 200
	225	85	2.1	10	4.5	951	1 280	97 000	130 000	1 700	2 200
	250	68	3	14	7	912	1 010	93 000	103 000	2 000	2 500
	250	68	3	14	7	912	1 010	93 000	103 000	2 000	2 500
	250	88	3	13	6	1 140	1 370	116 000	139 000	1 600	2 100
	300	102	4	19	9	1 540	1 720	157 000	175 000	1 500	1 900
	300	102	4	19	9	1 540	1 720	157 000	175 000	1 500	1 900
150	225	56	2.1	10	4.5	660	893	67 300	91 100	2 000	2 500
	225	56	2.1	10	4.5	660	893	67 300	91 100	2 000	2 500
	225	75	2.1	10	4.5	789	1 140	80 400	116 000	1 700	2 100
	250	80	2.1	13	6	1 060	1 350	108 000	138 000	1 600	2 000
	250	80	2.1	13	6	1 060	1 350	108 000	138 000	1 600	2 000
	250	100	2.1	12	6	1 180	1 590	121 000	162 000	1 600	2 000
	270	73	3	15	7	1 080	1 220	110 000	124 000	1 800	2 300
	270	73	3	15	7	1 080	1 220	110 000	124 000	1 800	2 300
	270	96	3	14	6	1 340	1 620	137 000	165 000	1 500	1 900
	320	108	4	20	9	1 740	1 890	178 000	193 000	1 400	1 700
160	220	45	2	9	4	455	683	46 400	69 600	1 900	2 400
	240	60	2.1	11	5	748	1 000	76 300	102 000	1 800	2 300
	240	60	2.1	11	5	748	1 000	76 300	102 000	1 800	2 300
	240	80	2.1	10	5	901	1 290	91 900	132 000	1 600	2 000
	270	86	2.1	14	6	1 220	1 580	124 000	162 000	1 500	1 900
	270	86	2.1	14	6	1 220	1 580	124 000	162 000	1 500	1 900
	270	109	2.1	14	6	1 360	1 860	139 000	190 000	1 500	1 800
	290	80	3	17	8	1 220	1 390	124 000	142 000	1 700	2 100
	290	80	3	17	8	1 220	1 390	124 000	142 000	1 700	2 100
	290	104	3	15	7	1 550	1 890	158 000	193 000	1 400	1 800
	340	114	4	20	10	1 950	2 210	199 000	226 000	1 300	1 600
170	230	45	2	9	4.5	468	723	47 700	73 700	1 800	2 300
	260	67	2.1	12	5	914	1 240	93 200	127 000	1 700	2 200
	260	67	2.1	12	5	914	1 240	93 200	127 000	1 700	2 200
	260	90	2.1	11	5	1 100	1 600	112 000	163 000	1 500	1 900
	280	88	2.1	14	6	1 270	1 700	129 000	173 000	1 400	1 800
	280	88	2.1	14	6	1 270	1 700	129 000	173 000	1 400	1 800
	280	109	2.1	14	6	1 410	1 990	144 000	203 000	1 400	1 700
	310	86	4	18	8	1 400	1 610	143 000	164 000	1 600	2 000
	310	110	4	16	8	1 700	2 070	173 000	211 000	1 300	1 700
	360	120	4	20	10	2 200	2 630	225 000	268 000	1 200	1 500

① Items marked 'K' indicate bearings with a bore taper ratio of 1/12, and items marked 'K30' indicate bearings with a bore taper ratio of 1/30. ② Indicates the minimum permissible chamfer dimension r.

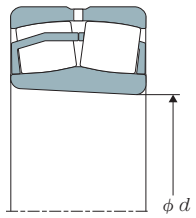

Tapered bore (Type EA)

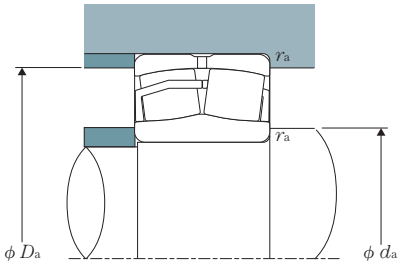

Dynamic equivalent radial load

$P_r = XF_r + YF_a$

$\frac{F_a}{F_r} \leqq e$		$\frac{F_a}{F_r} > e$	
X	Y	X	Y
1	Y_1	0.67	Y_2

Static equivalent radial load

$P_{or} = F_r + Y_o F_a$

e, Y_1, Y_2 and Y_o are obtained from the tables below.

Part Number		Installation Dimensions					Constant	Axial Load Coefficient			Mass (Ref.) kg	
Cylindrical Bore	Tapered Bore®	d_1	$d_{a\,min}$	$D_{a\,max}$	D_1	$r_{as\,max}$	e	Y_1	Y_2	Y_O	Cylindrical Bore	Tapered Bore
23028EAD1	23028EAKD1	155	149	201	193	2	0.22	3.14	4.67	3.07	6.32	6.13
23028EMD1	23028EMKD1	155	149	201	193	2	0.22	3.14	4.67	3.07	6.37	6.18
24028EMD1	24028EMK30D1	153	149	201	188	2	0.28	2.37	3.53	2.32	8.27	8.15
23128EAD1	23128EAKD1	159	152	213	203	2.1	0.26	2.55	3.80	2.50	10.3	9.94
23128EMD1	23128EMKD1	159	152	213	203	2.1	0.26	2.55	3.80	2.50	10.3	10.0
24128EMD1	24128EMK30D1	156	152	213	198	2.1	0.34	1.98	2.94	1.93	12.9	12.8
22228EAD1	22228EAKD1	163	154	236	224	3	0.25	2.74	4.08	2.68	13.9	13.6
22228EMD1	22228EMKD1	163	154	236	224	3	0.25	2.74	4.08	2.68	14.2	13.9
23228EMD1	23228EMKD1	162	154	236	220	3	0.33	2.06	3.06	2.01	18.2	17.7
22328EAD1	22328EAKD1	181	157	283	261	4	0.33	2.03	3.02	1.98	34.4	33.7
22328EMD1	22328EMKD1	181	157	283	261	4	0.33	2.03	3.02	1.98	35.4	34.7
23030EAD1	23030EAKD1	167	161	214	207	2.1	0.21	3.20	4.77	3.13	7.68	7.45
23030EMD1	23030EMKD1	167	161	214	207	2.1	0.21	3.20	4.77	3.13	7.73	7.50
24030EMD1	24030EMK30D1	165	161	214	202	2.1	0.29	2.32	3.45	2.26	10.4	10.3
23130EAD1	23130EAKD1	171	162	238	223	2.1	0.29	2.35	3.50	2.30	15.7	15.2
23130EMD1	23130EMKD1	171	162	238	223	2.1	0.29	2.35	3.50	2.30	15.8	15.3
24130EMD1	24130EMK30D1	168	162	238	216	2.1	0.36	1.85	2.76	1.81	19.7	19.4
22230EAD1	22230EAKD1	177	164	256	242	3	0.25	2.74	4.08	2.68	17.6	17.3
22230EMD1	22230EMKD1	177	164	256	242	3	0.25	2.74	4.08	2.68	18.0	17.7
23230EMD1	23230EMKD1	174	164	256	237	3	0.33	2.03	3.02	1.98	23.6	22.9
22330EMD1	22330EMKD1	188	167	303	279	4	0.34	2.00	2.98	1.96	42.2	41.3
23932EMD1	23932EMKD1	175	169	211	205	2	0.17	3.90	5.81	3.81	5.09	4.94
23032EAD1	23032EAKD1	177	171	229	221	2.1	0.21	3.20	4.77	3.13	9.32	9.03
23032EMD1	23032EMKD1	177	171	229	221	2.1	0.21	3.20	4.77	3.13	9.37	9.09
24032EMD1	24032EMK30D1	175	171	229	215	2.1	0.29	2.32	3.45	2.26	12.6	12.4
23132EAD1	23132EAKD1	185	172	258	240	2.1	0.29	2.35	3.50	2.30	20.1	19.5
23132EMD1	23132EMKD1	185	172	258	240	2.1	0.29	2.35	3.50	2.30	20.2	19.6
24132EMD1	24132EMK30D1	181	172	258	232	2.1	0.37	1.83	2.72	1.79	25.4	25.1
22232EAD1	22232EAKD1	190	174	276	260	3	0.25	2.69	4.00	2.63	22.3	21.8
22232EMD1	22232EMKD1	190	174	276	260	3	0.25	2.69	4.00	2.63	22.9	22.4
23232EMD1	23232EMKD1	187	174	276	254	3	0.33	2.03	3.02	1.98	29.6	28.8
22332EMD1	22332EMKD1	205	177	323	296	4	0.33	2.03	3.02	1.98	50.5	49.5
23934EMD1	23934EMKD1	185	179	221	215	2	0.16	4.11	6.12	4.02	5.39	5.23
23034EAD1	23034EAKD1	190	181	249	238	2.1	0.22	3.07	4.57	3.00	12.7	12.3
23034EMD1	23034EMKD1	190	181	249	238	2.1	0.22	3.07	4.57	3.00	12.8	12.4
24034EMD1	24034EMK30D1	186	181	249	231	2.1	0.30	2.23	3.32	2.18	17.2	16.9
23134EAD1	23134EAKD1	195	182	268	250	2.1	0.28	2.39	3.56	2.34	21.5	20.9
23134EMD1	23134EMKD1	195	182	268	250	2.1	0.28	2.39	3.56	2.34	21.6	20.9
24134EMD1	24134EMK30D1	193	182	268	243	2.1	0.35	1.91	2.85	1.87	26.7	26.3
22234EMD1	22234EMKD1	201	187	293	277	4	0.26	2.60	3.87	2.54	28.3	27.7
23234EMD1	23234EMKD1	199	187	293	272	4	0.33	2.03	3.02	1.98	35.8	34.8
22334EMD1	22334EMKD1	223	187	343	313	4	0.32	2.09	3.11	2.04	60.3	59.1

ULTAGE

ULTAGE Series Spherical Roller Bearings [Type EA, Type EM]

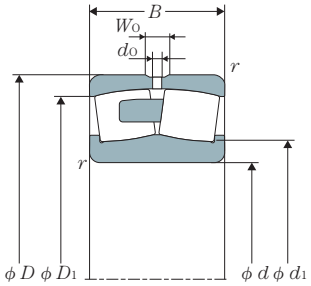

Cylindrical bore (Type EM)

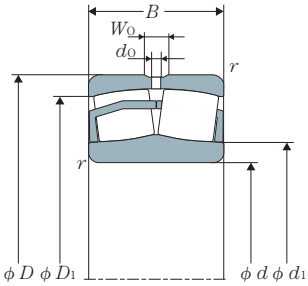

Cylindrical bore (Type EA)

Basic Dimensions mm						Basic Dynamic Load Rating kN	Basic Static Load Rating kN	Basic Dynamic Load Rating kgf	Basic Static Load Rating kgf	Permitted Rotational Speed min^{-1}	
d	D	B	$r_{s\,min}$②	Wo	do	Cr	Cor	Cr	Cor	Grease Lubrication	Oil Lubrication
180	250	52	2	10	5	573	869	58 400	88 600	1 700	2 100
	280	74	2.1	13	6	1 080	1 450	110 000	148 000	1 600	2 000
	280	74	2.1	13	6	1 080	1 450	110 000	148 000	1 600	2 000
	280	100	2.1	13	6	1 310	1 880	133 000	192 000	1 400	1 800
	300	96	3	15	7	1 490	1 960	152 000	200 000	1 300	1 700
	300	96	3	15	7	1 490	1 960	152 000	200 000	1 300	1 700
	300	118	3	15	7	1 660	2 290	169 000	233 000	1 300	1 600
	320	86	4	18	8	1 450	1 660	148 000	169 000	1 500	1 900
	320	112	4	16	8	1 800	2 270	183 000	231 000	1 200	1 600
	380	126	4	21	10	2 420	2 810	247 000	286 000	1 100	1 400
190	260	52	2	10	5	603	935	61 500	95 400	1 600	2 000
	290	75	2.1	13	6	1 140	1 570	116 000	160 000	1 500	1 900
	290	75	2.1	13	6	1 140	1 570	116 000	160 000	1 500	1 900
	290	100	2.1	13	6	1 360	2 000	138 000	204 000	1 300	1 700
	320	104	3	17	8	1 670	2 250	170 000	230 000	1 200	1 600
	320	128	3	16	8	1 900	2 700	194 000	275 000	1 200	1 500
	340	92	4	20	9	1 620	1 870	165 000	191 000	1 400	1 800
	340	120	4	18	8	1 990	2 480	203 000	253 000	1 200	1 500
	400	132	5	21	10	2 600	3 120	265 000	318 000	1 000	1 300
200	280	60	2.1	12	6	766	1 190	78 100	121 000	1 500	1 900
	310	82	2.1	15	7	1 310	1 790	134 000	182 000	1 400	1 800
	310	109	2.1	14	7	1 570	2 280	160 000	233 000	1 200	1 600
	340	112	3	18	8	1 890	2 510	192 000	256 000	1 100	1 400
	340	140	3	17	8	2 130	2 930	218 000	299 000	1 100	1 400
	360	98	4	20	10	1 810	2 100	184 000	214 000	1 400	1 700
	360	128	4	19	9	2 250	2 840	230 000	290 000	1 100	1 300
	420	138	5	21	10	2 830	3 530	289 000	360 000	950	1 200
220	300	60	2.1	12	6	789	1 260	80 500	128 000	1 400	1 700
	340	90	3	15	7	1 530	2 110	156 000	215 000	1 300	1 600
	340	118	3	15	7	1 850	2 720	189 000	278 000	1 100	1 400
	370	120	4	19	9	2 190	2 940	223 000	300 000	1 000	1 300
	370	150	4	19	9	2 540	3 620	259 000	369 000	1 000	1 300
	400	108	4	21	11	2 210	2 690	225 000	274 000	1 200	1 500
	400	144	4	20	10	2 890	3 830	295 000	391 000	1 000	1 200
240	320	60	2.1	12	6	815	1 350	83 100	138 000	1 300	1 600
	360	92	3	16	8	1 630	2 350	166 000	240 000	1 100	1 400
	360	118	3	16	8	1 940	2 980	198 000	304 000	1 000	1 300
	400	128	4	20	9	2 510	3 500	256 000	357 000	960	1 200
	400	160	4	19	9	2 910	4 290	297 000	438 000	960	1 200
260	360	75	2.1	14	7	1 130	1 940	115 000	198 000	1 100	1 400
	400	104	4	18	8	2 060	2 910	210 000	297 000	1 000	1 300
	400	140	4	18	8	2 520	3 820	257 000	390 000	960	1 200
280	380	75	2.1	14	7	1 180	2 050	120 000	209 000	1 000	1 300
	420	106	4	18	8	2 170	3 150	221 000	321 000	960	1 200
	420	140	4	18	8	2 620	4 060	267 000	414 000	880	1 100

① Items marked 'K' indicate bearings with a bore taper ratio of 1/12, and items marked 'K30' indicate bearings with a bore taper ratio of 1/30. ② Indicates the minimum permissible chamfer dimension r.

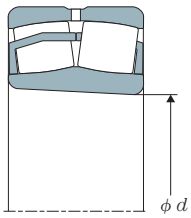

Tapered bore (Type EA)

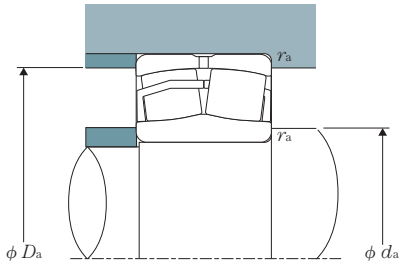

Dynamic equivalent radial load

$P_r = XF_r + YF_a$

$\frac{F_a}{F_r} \leqq e$		$\frac{F_a}{F_r} > e$	
X	Y	X	Y
1	Y_1	0.67	Y_2

Static equivalent radial load

$P_{or} = F_r + Y_o F_a$

e, Y_1, Y_2 and Y_o are obtained from the tables below.

Part Number		Installation Dimensions					Constant	Axial Load Coefficient			Mass (Ref.) kg	
Cylindrical Bore	Tapered Bore①	d_1	$d_{a\,min}$	$D_{a\,max}$	D_1	$r_{as\,max}$	e	Y_1	Y_2	Y_O	Cylindrical Bore	Tapered Bore
23936EMD1	23936EMKD1	199	189	241	232	2	0.17	3.90	5.81	3.81	7.79	7.56
23036EAD1	23036EAKD1	201	191	269	255	2.1	0.23	2.95	4.40	2.89	16.8	16.3
23036EMD1	23036EMKD1	201	191	269	255	2.1	0.23	2.95	4.40	2.89	16.9	16.4
24036EMD1	24036EMK30D1	199	191	269	248	2.1	0.31	2.15	3.20	2.10	22.8	22.4
23136EAD1	23136EAKD1	205	194	286	267	3	0.29	2.32	3.45	2.26	27.2	26.4
23136EMD1	23136EMKD1	205	194	286	267	3	0.29	2.32	3.45	2.26	27.4	26.5
24136EMD1	24136EMK30D1	202	194	286	259	3	0.36	1.87	2.79	1.83	33.5	33.0
22236EMD1	22236EMKD1	209	197	303	287	4	0.25	2.74	4.08	2.68	29.3	28.7
23236EMD1	23236EMKD1	210	197	303	282	4	0.33	2.06	3.06	2.01	38.2	37.1
22336EMD1	22336EMKD1	229	197	363	329	4	0.32	2.09	3.11	2.04	70.2	68.7
23938EMD1	23938EMKD1	209	199	251	243	2	0.17	4.05	6.04	3.96	8.20	7.96
23038EAD1	23038EAKD1	213	201	279	266	2.1	0.22	3.01	4.48	2.94	17.8	17.3
23038EMD1	23038EMKD1	213	201	279	266	2.1	0.22	3.01	4.48	2.94	17.9	17.4
24038EMD1	24038EMK30D1	209	201	279	258	2.1	0.30	2.23	3.32	2.18	23.8	23.4
23138EMD1	23138EMKD1	221	204	306	284	3	0.29	2.32	3.45	2.26	34.3	33.2
24138EMD1	24138EMK30D1	216	204	306	275	3	0.37	1.84	2.74	1.80	42.1	41.5
22238EMD1	22238EMKD1	222	207	323	305	4	0.25	2.74	4.08	2.68	35.6	34.9
23238EMD1	23238EMKD1	220	207	323	299	4	0.33	2.03	3.02	1.98	46.1	44.7
22338EMD1	22338EMKD1	247	210	380	346	5	0.32	2.12	3.15	2.07	81.5	79.9
23940EMD1	23940EMKD1	221	211	269	260	2.1	0.18	3.76	5.59	3.67	12.0	11.6
23040EMD1	23040EMKD1	223	211	299	283	2.1	0.23	2.95	4.40	2.89	22.8	22.1
24040EMD1	24040EMK30D1	221	211	299	275	2.1	0.31	2.18	3.24	2.13	30.2	29.7
23140EMD1	23140EMKD1	231	214	326	301	3	0.30	2.25	3.34	2.20	41.9	40.6
24140EMD1	24140EMK30D1	224	214	326	291	3	0.39	1.74	2.59	1.70	51.5	50.7
22240EMD1	22240EMKD1	234	217	343	323	4	0.25	2.74	4.08	2.68	42.7	41.8
23240EMD1	23240EMKD1	232	217	343	315	4	0.34	1.98	2.94	1.93	55.2	53.6
22340EMD1	22340EMKD1	265	220	400	364	5	0.31	2.15	3.20	2.10	94.6	92.7
23944EMD1	23944EMKD1	241	231	289	280	2.1	0.17	4.05	6.04	3.96	12.5	12.1
23044EMD1	23044EMKD1	246	233	327	310	3	0.23	2.95	4.40	2.89	29.9	29.1
24044EMD1	24044EMK30D1	243	233	327	302	3	0.31	2.20	3.27	2.15	39.2	38.6
23144EMD1	23144EMKD1	252	237	353	328	4	0.30	2.28	3.39	2.23	52.3	50.7
24144EMD1	24144EMK30D1	247	237	353	317	4	0.38	1.78	2.65	1.74	65.2	64.3
22244EMD1	22244EMKD1	264	237	383	358	4	0.25	2.74	4.08	2.68	59.6	58.4
23244EMD1	23244EMKD1	261	237	383	349	4	0.34	2.00	2.98	1.96	79.4	77.1
23948EMD1	23948EMKD1	262	251	309	301	2.1	0.15	4.40	6.56	4.31	13.5	13.1
23048EMD1	23048EMKD1	267	253	347	329	3	0.22	3.07	4.57	3.00	32.0	31.7
24048EMD1	24048EMK30D1	264	253	347	322	3	0.28	2.37	3.53	2.32	42.2	41.6
23148EMD1	23148EMKD1	276	257	383	356	4	0.29	2.32	3.45	2.26	65.1	63.1
24148EMD1	24148EMK30D1	270	257	383	344	4	0.37	1.82	2.70	1.78	81.0	79.8
23952EMD1	23952EMKD1	292	271	349	335	2.1	0.17	3.90	5.81	3.81	23.9	23.1
23052EMD1	23052EMKD1	291	275	385	366	4	0.23	2.95	4.40	2.89	47.8	46.3
24052EMD1	24052EMK30D1	286	275	385	354	4	0.31	2.16	3.22	2.12	63.6	62.6
23956EMD1	23956EMKD1	310	291	369	356	2.1	0.16	4.16	6.20	4.07	25.2	24.4
23056EMD1	23056EMKD1	310	295	405	386	4	0.22	3.07	4.57	3.00	51.3	49.7
24056EMD1	24056EMK30D1	306	295	405	376	4	0.29	2.30	3.42	2.25	67.3	66.3

ULTAGE

ULTAGE Series Spherical Roller Bearings with High-Strength Cage [Type EMA]

Bearing Number

223	20	EMA	K	D1	VS1

- VS1 – Vibrating screen specification no code : general bearing clearance and precision
- D1 – Lubricant groove/hole code
- K – Raceway shape code – no code : inner dia. cylindrical bore; K : tapered bore
- EMA – Bearing type code – single-body machined retainer w/outer ring guide
- 20 – Inner diameter number
- 223 – Bearing series (type code + width series code + dia. series code.)

Dynamic equivalent radial load

$P_r = XF_r + YF_a$

$\frac{F_a}{F_r} \leqq e$		$\frac{F_a}{F_r} > e$	
X	Y	X	Y
1	Y_1	0.67	Y_2

Static equivalent radial load

$P_{or} = F_r + Y_o F_a$

e, Y_1, Y_2 and Y_o are obtained from the tables below.

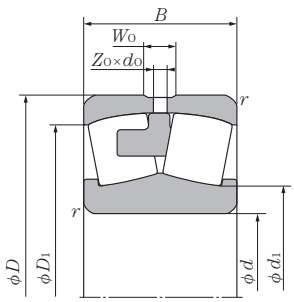

Cylindrical bore

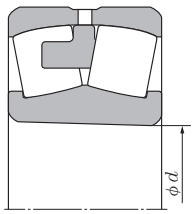

Tapered bore

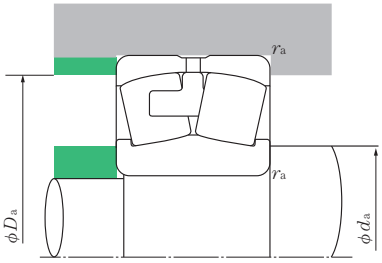

Basic Dimensions mm						Basic Dynamic Load Rating kN	Basic Static Load Rating kN	Basic Dynamic Load Rating kgf	Basic Static Load Rating kgf	Permitted Rotational Speed min^{-1}
d	D	B	$r_{s\,min}$②	Wo	do	Cr	Cor	Cr	Cor	Oil Lubrication
70	150	51	2.1	10	5	397	368	40 500	37 500	4 700
75	160	55	2.1	10	5	464	434	47 400	44 200	4 400
80	170	58	2.1	10	5	512	485	52 200	49 400	4 100
85	180	60	3	11	5	538	524	54 900	53 400	3 900
90	190	64	3	12	5	632	605	64 500	61 700	3 700
95	200	67	3	12	6	658	650	67 000	66 300	3 500
100	215	73	3	13	6	743	731	75 700	74 600	3 300
110	240	80	3	16	7	869	833	88 600	84 900	3 000
120	260	86	3	18	8	1 060	1 120	108 000	114 000	2 700
130	280	93	4	19	9	1 260	1 310	129 000	134 000	2 500
140	300	102	4	19	9	1 400	1 500	142 000	153 000	2 400
150	320	108	4	20	9	1 570	1 640	160 000	167 000	2 200
160	340	114	4	20	10	1 760	1 940	180 000	198 000	2 100
170	360	120	4	20	10	2 010	2 320	205 000	237 000	1 900
180	380	126	4	21	10	2 190	2 460	223 000	250 000	1 800
190	400	132	5	21	10	2 370	2 750	242 000	281 000	1 700
200	420	138	5	21	10	2 590	3 140	265 000	320 000	1 600

① Indicates bearings with a bore taper ratio of 1/12. ② Indicates the minimum permissible chamfer dimension r.

Vibrating Screen Specification (VS spec.)

Bearing specification suitable for vibrating screen applications.

The inner and outer diameter tolerances and radial internal clearances of these bearing specifications are set to the correct operating clearances for vibrating screen applications.

Units : mm

Single Plane Mean Bore Inner Diameter Deviation				Single Plane Mean Bore Outer Diameter Deviation				Radial Internal Clearance (Cylindrical Bore)					
Nominal Bearing Inner dia.		VS1, VS2		Nominal Bearing Outer dia.		VS1, VS2		Nominal Bearing Inner dia.		VS1		VS2	
Greater Than	Equal to or Less Than	Upper	Lower	Greater Than	Equal to or Less Than	Upper	Lower	Greater Than	Equal to or Less Than	Min.	Max.	Min.	Max.
	80	0	– 0.010		150	– 0.005	– 0.013		65	0.075	0.090	0.100	0.120
80	120	0	– 0.013	150	180	– 0.005	– 0.018	65	80	0.090	0.110	0.120	0.145
120	180	0	– 0.015	180	315	– 0.010	– 0.023	80	100	0.110	0.135	0.150	0.180
180	200	0	– 0.018	315	400	– 0.013	– 0.028	100	120	0.135	0.160	0.180	0.210
				400	420	– 0.014	– 0.030	120	140	0.160	0.190	0.205	0.240
								140	160	0.190	0.220	0.240	0.280
								160	180	0.200	0.240	0.260	0.310
								180	200	0.220	0.260	0.285	0.340

No. of outer ring outer diameter oil holes

Nominal Bearing Inner dia. mm		No. of Oil Holes D1
Or Higher	Less Than	Z_O
—	320	4
320	420[1)]	8

1) 420 mm is included in this size class.

Part Number		Installation Dimensions					Constant	Axial Load Coefficient			Mass (Ref.) kg	
Cylindrical Bore	Tapered Bore[①]	d_1	$d_{a\,min}$	$D_{a\,max}$	D_1	$r_{as\,max}$	e	Y_1	Y_2	Y_O	Cylindrical Bore	Tapered Bore
22314EMAD1	22314EMAKD1	85	82	138	131	2.1	0.34	2.00	2.98	1.96	4.34	4.25
22315EMAD1	22315EMAKD1	91	87	148	139	2.1	0.34	2.00	2.98	1.96	5.30	5.19
22316EMAD1	22316EMAKD1	98	92	158	148	2.1	0.34	2.00	2.98	1.96	6.32	6.19
22317EMAD1	22317EMAKD1	107	99	166	157	3	0.32	2.09	3.11	2.04	7.19	7.05
22318EMAD1	22318EMAKD1	110	104	176	166	3	0.33	2.06	3.06	2.01	8.58	8.41
22319EMAD1	22319EMAKD1	120	109	186	174	3	0.32	2.09	3.11	2.04	9.80	9.60
22320EMAD1	22320EMAKD1	127	114	201	187	3	0.34	1.98	2.94	1.93	12.8	12.5
22322EMAD1	22322EMAKD1	139	124	226	209	3	0.32	2.09	3.11	2.04	17.3	16.9
22324EMAD1	22324EMAKD1	156	134	246	225	3	0.32	2.09	3.11	2.04	22.5	22.0
22326EMAD1	22326EMAKD1	164	147	263	243	4	0.33	2.06	3.06	2.01	28.4	27.8
22328EMAD1	22328EMAKD1	181	157	283	261	4	0.33	2.03	3.02	1.98	34.6	33.8
22330EMAD1	22330EMAKD1	188	167	303	279	4	0.34	2.00	2.98	1.96	41.9	41.0
22332EMAD1	22332EMAKD1	205	177	323	296	4	0.33	2.03	3.02	1.98	50.1	49.1
22334EMAD1	22334EMAKD1	223	187	343	313	4	0.32	2.09	3.11	2.04	59.7	58.5
22336EMAD1	22336EMAKD1	229	197	363	329	4	0.32	2.09	3.11	2.04	69.3	67.9
22338EMAD1	22338EMAKD1	247	210	380	346	5	0.32	2.12	3.15	2.07	81.0	79.4
22340EMAD1	22340EMAKD1	265	220	400	364	5	0.31	2.15	3.20	2.10	94.1	92.2

ULTAGE

ULTAGE Series Sealed Spherical Roller Bearings [Type WA]

Bearing Number

WA	222	20	EA	LLS	K	D1	C3

- C3 – Internal clearance code
- D1 – Internal clearance code : D1 : oil groove w/oil hole (Japan MFG spec.); W33 : oil groove w/oil hole (Europe MFG spec.)
- K – Bore shape code – no code : inner dia. cylindrical bore; K : tapered bore
- LLS – Dual-side contact seal
- EA – Bearing type code – EA : pressed steel cage-type retainer
- 20 – Inner diameter number
- 222 – Bearing series (type code + width series code + dia. series code.)
- WA – Bearings with width dimensions different to standard sizes

Basic Dimensions (mm)						Basic Dynamic Load Rating (kN)	Basic Static Load Rating (kN)	Basic Dynamic Load Rating (kgf)	Basic Static Load Rating (kgf)	Part Number	
d	D	B	$r_{s\,min}$②	Wo	do	Cr	Cor	Cr	Cor	Cylindrical Bore	Tapered Bore①
25	52	23	1	3	1.5	57.3	46.1	5 840	4 700	WA22205EALLSW33	–
30	62	25	1	4	2	75.7	64.5	7 720	6 580	WA22206EALLSW33	–
35	72	28	1.1	5	2	100	92	10 200	9 380	WA22207EALLSW33	WA22207EALLSKW33
40	80	28	1.1	5	2.5	116	105	11 800	10 700	WA22208EALLSD1	WA22208EALLSKD1
45	85	28	1.1	6	2.5	121	113	12 300	11 500	WA22209EALLSD1	WA22209EALLSKD1
50	90	28	1.1	6	2.5	130	124	13 300	12 600	WA22210EALLSD1	WA22210EALLSKD1
55	100	31	1.5	6	3	155	148	15 800	15 100	WA22211EALLSD1	WA22211EALLSKD1
60	110	34	1.5	7	3	187	181	19 100	18 400	WA22212EALLSD1	WA22212EALLSKD1
65	120	38	1.5	8	3.5	226	224	23 100	22 900	WA22213EALLSD1	WA22213EALLSKD1
70	125	38	1.5	7	3.5	235	240	24 000	24 400	WA22214EALLSD1	WA22214EALLSKD1
75	130	38	1.5	7	3.5	244	249	24 800	25 400	WA22215EALLSD1	WA22215EALLSKD1
80	140	40	2	8	3.5	278	287	28 400	29 300	WA22216EALLSD1	WA22216EALLSKD1
85	150	44	2	8	3.5	324	330	33 000	33 600	WA22217EALLSD1	WA22217EALLSKD1
90	160	48	2	10	4.5	384	398	39 200	40 600	WA22218EALLSD1	WA22218EALLSKD1
100	180	55	2.1	11	5	472	495	48 100	50 500	WA22220EALLSD1	WA22220EALLSKD1
110	200	63	2.1	12	6	602	643	61 400	65 600	WA22222EALLSD1	WA22222EALLSKD1
120	215	69	2.1	12	6	688	753	70 100	76 800	WA22224EALLSD1	WA22224EALLSKD1
130	230	75	3	13	6	808	898	82 400	91 600	WA22226EALLSD1	WA22226EALLSKD1

① Indicates bearings with a bore taper ratio of 1/12. ② Indicates the minimum permissible chamfer dimension r.

Cautions when handling bearings

1. Because the internal radial clearance of "ULTAGE Series Sealed Spherical Roller Bearings" with tapered bores cannot be measured with a thickness gauge, please monitor clearances by measuring the axial movement of the inner ring as shown in Table 1.
2. During assembly, if misalignment exceeding the allowable misalignment angle of ±0.5° is applied to the bearing, rollers may come in direct contact with seals causing seal deformation. Furthermore, if additional force is applied under these conditions, seals may separate from the bearing entirely. Therefore, caution is advised.
3. Please use Lithium mineral grease. In case other types of grease are to be used, please consult **NTN**.
4. If a shrink fit is to be applied, please do not exceed a bearing temperature of 100°C. However, these bearing cannot be shrink fit via immersion in a hot oil bath.

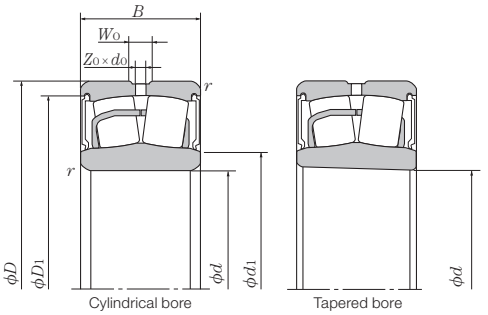

No. of outer ring outer diameter oil holes

Z_O	
D1	W33
4	3

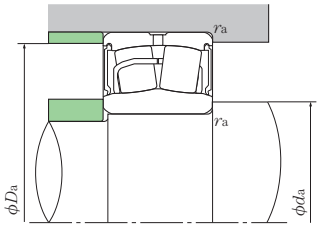

Dynamic equivalent radial load

$P_r = XF_r + YF_a$

$\frac{F_a}{F_r} \leqq e$		$\frac{F_a}{F_r} > e$	
X	Y	X	Y
1	Y_1	0.67	Y_2

Static equivalent radial load

$P_{or} = F_r + Y_o F_a$

e, Y_1, Y_2 and Y_o are obtained from the tables below.

Adjacent Dimensions					Constant	Axial Load Coefficient			Mass (Ref.) kg		Grease Pack Amount (Ref.) g
d_1	$d_{a\,min}$	$D_{a\,max}$	D_1	$r_{as\,max}$	e	Y_1	Y_2	Y_O	Cylindrical Bore	Tapered Bore	
29	29	47	47	1	0.34	2.00	2.98	1.96	0.19	–	1.4 ~ 2.4
36	36	56	56	1	0.31	2.15	3.20	2.10	0.30	–	2.0 ~ 3.3
43	42	65	65	1.1	0.31	2.21	3.29	2.16	0.50	0.49	2.3 ~ 3.9
48	47	73	73	1.1	0.27	2.47	3.67	2.41	0.58	0.57	3.1 ~ 5.2
53	52	78	78	1.1	0.26	2.64	3.93	2.58	0.63	0.61	3.4 ~ 5.7
58	57	83	83	1.1	0.24	2.84	4.23	2.78	0.70	0.68	3.4 ~ 5.6
64	64	93	93	1.5	0.23	2.95	4.40	2.89	0.94	0.91	5.2 ~ 7.9
70	69	102	102	1.5	0.24	2.84	4.23	2.78	1.25	1.22	6.6 ~ 11.0
76	74	111	110	1.5	0.24	2.79	4.15	2.73	1.72	1.67	8.5 ~ 14.2
82	79	116	116	1.5	0.22	3.01	4.48	2.94	1.78	1.73	9.6 ~ 16.0
86	84	121	121	1.5	0.22	3.14	4.67	3.07	1.88	1.83	9.9 ~ 16.4
93	91	131	131	2	0.22	3.14	4.67	3.07	2.32	2.27	12.2 ~ 20.3
98	96	140	140	2	0.22	3.07	4.57	3.00	2.90	2.83	16.9 ~ 28.1
103	101	149	147	2	0.23	2.90	4.31	2.83	3.68	3.59	20.4 ~ 34.1
115	112	168	165	2.1	0.24	2.84	4.23	2.78	5.40	5.25	28.8 ~ 48.0
127	122	188	183	2.1	0.25	2.69	4.00	2.63	7.79	7.58	41.6 ~ 69.3
138	132	203	197	2.1	0.25	2.74	4.08	2.68	9.76	9.48	52.8 ~ 88.0
148	144	216	211	3	0.25	2.69	4.00	2.63	11.9	11.6	62.6 ~ 104.4

Table 1. Installation of Tapered Bore Sealed Spherical Roller Bearings

Units : mm

Nominal Bearing Inside Diameter d		Radial Internal Clearance Reduction		Axial Displacement Drive-up		Minimum Residual Radial Internal Clearance		
Greater Than	Equal to or Less Than	Min.	Max.	Min.	Max.	CN	C3	C4
24	30	0.010	0.015	0.15	0.20	0.015	0.025	0.040
30	40	0.015	0.020	0.25	0.30	0.015	0.030	0.045
40	50	0.020	0.025	0.35	0.40	0.020	0.035	0.055
50	65	0.025	0.030	0.40	0.45	0.025	0.045	0.065
65	80	0.035	0.040	0.50	0.60	0.030	0.055	0.080
80	100	0.040	0.050	0.60	0.70	0.030	0.060	0.090
100	120	0.055	0.065	0.80	0.90	0.035	0.070	0.105
120	130	0.065	0.075	0.90	1.00	0.045	0.085	0.125

Triple-Lip Sealed Bearings for Bearing Units

Bearing Number

UC	3	05	D1	LLJ

- LLJ — Triple-Lip seal code
- D1 — Lubricating method
- 05 — Inside diameter
- 3 — Diameter series
- UC — Bearing type code

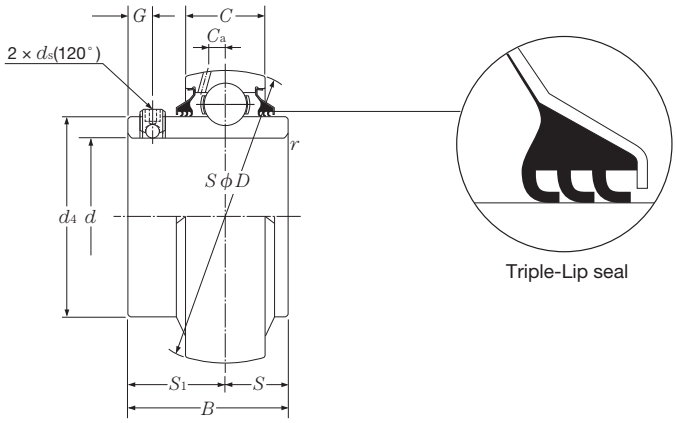

Shaft Diameter mm	Part Number	Dimensions mm											Basic Dynamic Load Rating kN	Basic Static Load Rating kN	Coefficient	Bearing Mass kg
		d	D	B	C	$r_{s\,min}$①	S	S_1	G	ds	Ca	d_4	Cr	Cor	fo	(Ref.)
12	UC201D1LLJ	12	47	31	17	0.6	12.7	18.3	4.5	M 5 × 0.8	3.8	29.6	12.8	6.65	13.2	0.21
15	UC202D1LLJ	15	47	31	17	0.6	12.7	18.3	4.5	M 5 × 0.8	3.8	29.6	12.8	6.65	13.2	0.20
17	UC203D1LLJ	17	47	31	17	0.6	12.7	18.3	4.5	M 5 × 0.8	3.8	29.6	12.8	6.65	13.2	0.18
20	UC204D1LLJ	20	47	31	17	1	12.7	18.3	4.5	M 5 × 0.8	3.8	29.6	12.8	6.65	13.2	0.17
25	UC205D1LLJ	25	52	34.1	17	1	14.3	19.8	5	M 5 × 0.8	4	33.9	14.0	7.85	13.9	0.20
30	UC206D1LLJ	30	62	38.1	19	1	15.9	22.2	5	M 6 × 0.75	4.9	40.8	19.5	11.3	13.8	0.32
35	UC207D1LLJ	35	72	42.9	20	1.5	17.5	25.4	6	M 6 × 0.75	5.4	46.8	25.7	15.3	13.8	0.46
40	UC208D1LLJ	40	80	49.2	21	1.5	19	30.2	8	M 8 × 1	6	53	29.1	17.8	14.0	0.64
45	UC209D1LLJ	45	85	49.2	22	1.5	19	30.2	8	M 8 × 1	6.1	57.5	32.5	20.4	14.1	0.68
50	UC210D1LLJ	50	90	51.6	24	1.5	19	32.6	9	M 8 × 1	6.1	62.4	35.0	23.2	14.4	0.78
55	UC211D1LLJ	55	100	55.6	25	2	22.2	33.4	9	M 8 × 1	6.5	69	43.5	29.2	14.3	1.04
60	UC212D1LLJ	60	110	65.1	27	2	25.4	39.7	10	M10 × 1.25	7.3	77	52.5	36.0	14.3	1.46
65	UC213D1LLJ	65	120	65.1	32	2	25.4	39.7	10	M10 × 1.25	7.3	82.5	57.5	40.0	14.4	1.86
70	UC214D1LLJ	70	125	74.6	33	2	30.2	44.4	12	M10 × 1.25	7.7	87	62.0	44.0	14.5	2.10
75	UC215D1LLJ	75	130	77.8	34	2	33.3	44.5	12	M10 × 1.25	8	93	66.0	49.5	14.7	2.34
80	UC216D1LLJ	80	140	82.6	35	2.5	33.3	49.3	12	M10 × 1.25	8	98.1	72.5	53.0	14.6	2.78
85	UC217D1LLJ	85	150	85.7	36	2.5	34.1	51.6	12	M12 × 1.5	7.9	106.4	83.5	64.0	14.7	3.54
90	UC218D1LLJ	90	160	96	37	2.5	39.7	56.3	12	M12 × 1.5	8.7	111.6	96.0	71.5	14.5	4.40

① Indicates the minimum permissible chamfer dimension r.
Note 1 : Refer to the related Bearing Units catalog (Cat. No. 2400) for the shaft size tolerances.
2 : The precision of the ball bearings is identical to JIS B1558 (ball bearings for rolling bearings units).
3 : Contact **NTN** for the ball bearing shaft dimensions and tapered bore sizes in inches.

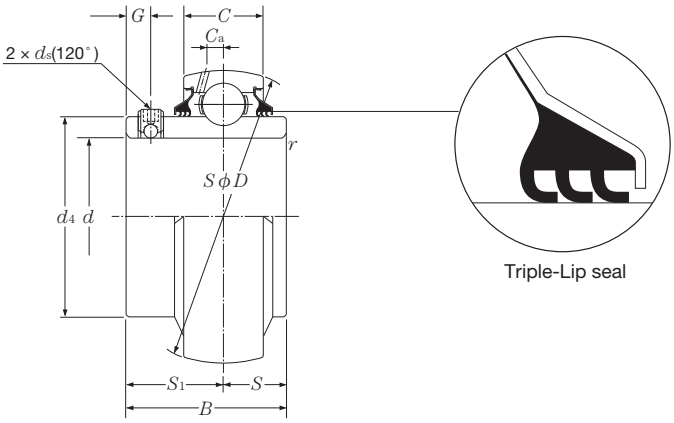

Shaft Diameter mm	Part Number	Dimensions mm											Basic Dynamic Load Rating kN	Basic Static Load Rating kN	Coefficient	Bearing Mass kg
		d	D	B	C	$r_{s\,min}$①	S	S_1	G	ds	Ca	d_4	Cr	Cor	fo	(Ref.)
25	UC305D1LLJ	25	62	38	20	1.5	15	23	6	M 6 × 0.75	5	36.8	21.2	10.9	12.6	0.35
30	UC306D1LLJ	30	72	43	23	1.5	17	26	6	M 6 × 0.75	5.6	44.9	26.7	15.0	13.3	0.56
35	UC307D1LLJ	35	80	48	25	2	19	29	8	M 8 × 1	5.7	49.4	33.5	19.1	13.1	0.70
40	UC308D1LLJ	40	90	52	27	2	19	33	10	M10 × 1.25	6.1	56	40.5	24.0	13.2	0.96
45	UC309D1LLJ	45	100	57	29	2	22	35	10	M10 × 1.25	7.1	63.5	53.0	32.0	13.1	1.28
50	UC310D1LLJ	50	110	61	32	2.5	22	39	12	M12 × 1.5	7.9	70.6	62.0	38.5	13.2	1.68
55	UC311D1LLJ	55	120	66	34	2.5	25	41	12	M12 × 1.5	8.5	76.6	71.5	45.0	13.2	2.08
60	UC312D1LLJ	60	130	71	36	2.5	26	45	12	M12 × 1.5	9	82.7	82.0	52.0	13.2	2.62
65	UC313D1LLJ	65	140	75	39	2.5	30	45	12	M12 × 1.5	9.4	88.2	92.5	60.0	13.2	3.22
70	UC314D1LLJ	70	150	78	41	2.5	33	45	12	M12 × 1.5	10	94.8	104	68.0	13.2	3.86
75	UC315D1LLJ	75	160	82	43	2.5	32	50	14	M14 × 1.5	10.5	101.3	113	77.0	13.2	4.70
80	UC316D1LLJ	80	170	86	45	2.5	34	52	14	M14 × 1.5	11.1	107.9	123	86.5	13.3	5.60
85	UC317D1LLJ	85	180	96	47	3	40	56	16	M16 × 1.5	11.5	114.4	133	97.0	13.3	6.70
90	UC318D1LLJ	90	190	96	49	3	40	56	16	M16 × 1.5	12.2	120.9	143	107	13.3	7.60
95	UC319D1LLJ	95	200	103	51	3	41	62	16	M16 × 1.5	12.7	127.5	153	119	13.3	8.70
100	UC320D1LLJ	100	215	108	55	3	42	66	18	M18 × 1.5	14	135.6	173	141	13.2	10.80

① Indicates the minimum permissible chamfer dimension r.
Note 1 : Refer to the related Bearing Units catalog (Cat. No. 2400) for the shaft size tolerances.
2 : The precision of the ball bearings is identical to JIS B1558 (ball bearings for rolling bearings units).
3 : Contact **NTN** for the ball bearing shaft dimensions and tapered bore sizes in inches.

SL Type Cylindrical Roller Bearings for Sheaves

Shaft diameter	ⓓ40 ~ 170 mm

Bearing Number

SL04-	50	08	NR

- NR: w/snap rings : NR; wo snap rings : N
- 08: Inner dia. number
- 50: Size number
- SL04-: Type code

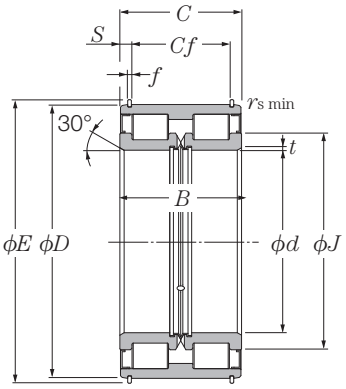

Basic Dimensions mm						Basic Dynamic Load Rating kN	Basic Static Load Rating kN	Basic Dynamic Load Rating kgf	Basic Static Load Rating kgf	Permitted Rotational Speed min⁻¹ Grease Lubrication	Part Number
d	D	B	C	t	$r_{s\,min}$	C_r	C_{or}	C_r	C_{or}		
40	68	38	37	0.8	0.6	79.5	116	8 100	11 800	2 500	SL04-5008NR
45	75	40	39	0.8	0.6	95.5	144	9 750	14 700	2 200	SL04-5009NR
50	80	40	39	0.8	0.6	100	158	10 200	16 100	2 000	SL04-5010NR
55	90	46	45	1	0.6	118	193	12 100	19 600	1 800	SL04-5011NR
60	95	46	45	1	0.6	123	208	12 600	21 200	1 700	SL04-5012NR
65	100	46	45	1	0.6	128	224	13 100	22 800	1 500	SL04-5013NR
70	110	54	53	1	0.6	171	285	17 500	29 000	1 400	SL04-5014NR
75	115	54	53	1	0.6	197	325	20 000	33 000	1 300	SL04-5015NR
80	125	60	59	1	0.6	205	350	20 900	36 000	1 300	SL04-5016NR
85	130	60	59	1	0.6	214	380	21 800	38 500	1 200	SL04-5017NR
90	140	67	66	1.5	0.6	305	540	31 000	55 000	1 100	SL04-5018NR
95	145	67	66	1.5	0.6	310	560	32 000	57 500	1 100	SL04-5019NR
100	150	67	66	1.5	0.6	330	580	33 500	59 500	1 000	SL04-5020NR
110	170	80	79	1.8	1	385	695	39 000	71 000	910	SL04-5022NR
120	180	80	79	1.8	1	400	750	41 000	76 500	830	SL04-5024NR
130	200	95	94	1.8	1	535	1 000	55 000	102 000	770	SL04-5026NR
140	210	95	94	1.8	1	600	1 120	61 000	115 000	710	SL04-5028NR
150	225	100	99	2	1	690	1 290	70 500	131 000	670	SL04-5030NR
160	240	109	108	2	1.1	720	1 390	73 500	142 000	630	SL04-5032NR
170	260	122	121	2	1.1	925	1 790	94 500	182 000	590	SL04-5034NR

Note 1 : These bearings are packed with grease.
2 : These bearings are surface treated to prevent rust.
3 : These bearings are non-contact type shielded bearings. However, **NTN** also manufactures contact type sealed bearings, which are available on request.

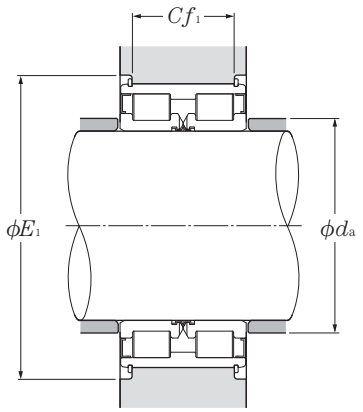

Dimensions mm					Installation Dimensions mm			Mass
J	E (Ref.)	f	Cf	S	da (Min.)	E_1	$Cf_1$①	kg (Ref.)
51	71.8	2	28	4.5	43.5	82	28	10.552
56.6	79	2	30	4.5	48.5	88	30	0.688
61	83.8	2	30	4.5	53.5	94	30	0.752
67.9	95	2.5	34	5.5	60	106	34	1.12
73.4	100	2.5	34	5.5	65	112	34	1.2
78	105	2.5	34	5.5	70	116	34	1.27
84.5	114.5	2.5	42	5.5	75	130	42	1.87
90	119.7	2.5	42	5.5	80	135	42	1.97
96.5	129.7	2.5	48	5.5	85	145	48	2.66
103.7	134.5	2.5	48	5.5	90	155	48	2.79
110	146.3	2.5	54	6	96	165	54	3.71
114.4	151.3	2.5	54	6	101	175	54	3.87
118.5	156.3	2.5	54	6	106	180	54	4.03
131.5	176.4	2.5	65	7	116.5	200	65	7
141.5	188.4	3	65	7	126.5	210	65	7.5
158	208.4	3	77	8.5	136.5	230	77	11.4
167	218.5	3	77	8.5	146.5	245	77	12.1
178	233.5	3	81	9	157	260	81	14.6
191	248.5	3	89	9.5	167	275	89	18.2
203	270.5	4	99	11	177	300	99	24.6

① Tolerances for Cf_1 dimensions SL04-5008NR ~ SL04-5034NR : -0.1 ~ -0.5 mm
SL04-5036NR ~ SL04-5040NR : -0.1 ~ -0.7 mm

SL Type Cylindrical Roller Bearings for Sheaves

Shaft diameter	d 180 ~ 440 mm

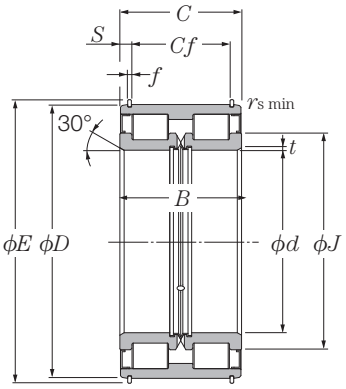

Basic Dimensions mm						Basic Dynamic Load Rating kN	Basic Static Load Rating kN	Basic Dynamic Load Rating kgf	Basic Static Load Rating kgf	Permitted Rotational Speed min^{-1} Grease Lubrication	Part Number
d	D	B	C	t	$r_{s\,min}$	C_r	C_{or}	C_r	C_{or}		
180	280	136	135	2	1.1	1 090	2 140	111 000	218 000	560	SL04-5036NR
190	290	136	135	2	1.1	1 120	2 230	114 000	227 000	530	SL04-5038NR
200	310	150	149	2	1.1	1 310	2 650	133 000	270 000	500	SL04-5040NR
220	340	160	159	2.5	1.1	1 640	3 300	167 000	335 000	450	SL04-5044NR
240	360	160	159	2.5	1.1	1 710	3 550	175 000	365 000	420	SL04-5048NR
260	400	190	189	3	1.5	1 950	4 200	199 000	425 000	380	SL04-5052NR
280	420	190	189	3	1.5	2 170	4 700	221 000	475 000	360	SL04-5056NR
300	460	218	216	3	1.5	2 670	5 850	272 000	600 000	330	SL04-5060NR
320	480	218	216	3	1.5	2 720	6 100	278 000	620 000	310	SL04-5064NR
340	520	243	241	3.5	2	3 650	8 000	370 000	815 000	290	SL04-5068NR
360	540	243	241	3.5	2	3 750	8 300	380 000	845 000	280	SL04-5072NR
380	560	243	241	3.5	2	3 800	8 750	385 000	895 000	260	SL04-5076NR
400	600	272	270	3.5	2	4 250	9 950	435 000	1 010 000	250	SL04-5080NR
420	620	272	270	3.5	2	4 350	10 300	445 000	1 050 000	240	SL04-5084NR
440	650	280	278	4.5	3	4 500	11 000	460 000	1 120 000	230	SL04-5088NR

Note 1 : These bearings are packed with grease.
2 : These bearings are surface treated to prevent rust.
3 : These bearings are non-contact type shielded bearings. However, **NTN** also manufactures contact type sealed bearings, which are available on request.

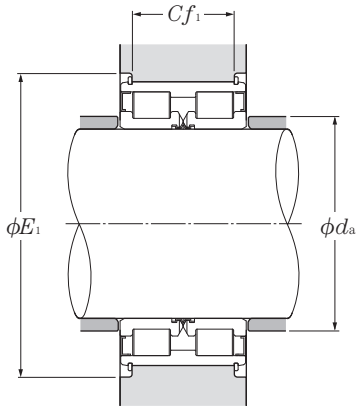

Dimensions mm					Installation Dimensions mm			Mass
	E				da			kg
J	(Ref.)	f	Cf	S	(Min.)	E_1	$Cf_1$①	(Ref.)
220	290.5	4	110	12.5	187	320	110	32.3
226	300.5	4	110	12.5	197	330	110	33.7
245.5	320.5	4	120	14.5	207	350	120	43.5
260	357	6	130	14.5	228.5	380	130	55.5
280.5	377	6	130	14.5	248.5	400	130	59.5
310	417	7	154	17.5	270	445	154	90.7
325	437	7	154	17.5	290	465	154	96.2
363	481	8	176	20	310	510	176	137
376	501	8	176	20	330	530	176	144
406	545	8	194	23.5	352	580	194	194
421	565	10	194	23.5	372	600	194	203
442	585	10	194	23.5	392	620	194	212
470	627	12	210	30	412	675	210	281
486	647	12	210	30	432	695	210	292
518	677	12	210	34	456	725	210	331

① Tolerances for Cf_1 dimensions SL04-5008NR ~ SL04-5034NR : -0.1 ~ -0.5 mm
SL04-5036NR ~ SL04-5040NR : -0.1 ~ -0.7 mm

Flaking (Delamination or Spalling)

Phenomena	Primary Causes	Primary Preventative Measures
The raceway surface peels away in scale-like flakes. After the flaking develops, the remaining surface is markedly uneven/rough. This phenomenon is called delamination, spalling or fatigue wear.	Although this fatigue phenomenon is caused by rolling motion, this phenomenon may occur prematurely if abnormally excessive loads are applied, poor bearing handling, poor shaft and/or housing precision, and or installation errors, etc. Intrusion of foreign material and corrosion are also contributing factors.	(1) Investigate the existence of factors applying abnormal loads. (2) Reevaluate the conditions of use and, depending on the conditions, use bearings with a greater load capacity. (3) Improve the lubrication method by increasing the viscosity of the lubricant to form a good lubricant seal. (4) Prevent installation damage

Photo A-1

- Deep groove ball bearings
- Flaking has occurred on each of the inner/outer ring and balls
- Caused by excessive load

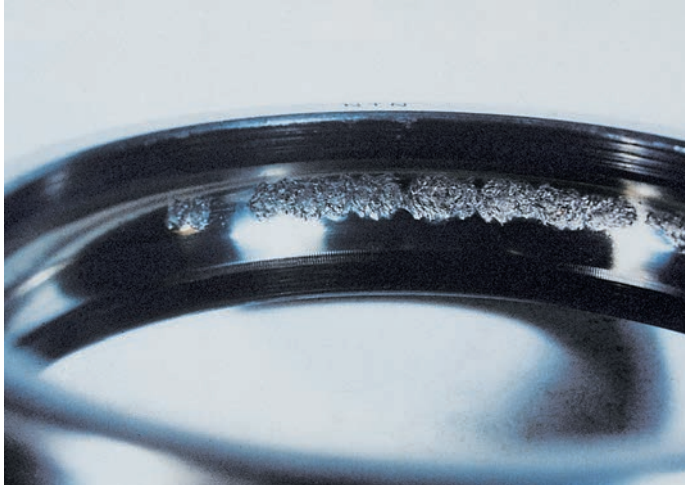

Photo A-2

- Angular bearing outer ring
- Flaking Caused by the ball pitch on the raceway surface
- Caused by poor bearing handling

Photo A-3

- Deep groove ball bearing inner ring
- Flaking has occurred on one side of the raceway surface
- Caused by excessive axial load

Photo A-4

- Spherical roller bearing inner ring
- Flaking has occurred only on one side of the raceway surface
- Caused by excessive axial load

Bearing Inspection and Maintenance

Performing periodic inspections and maintenance of the bearings makes it possible to maximize bearing performance, and also detect any early-stage bearing anomalies. Therefore, inspections and maintenance can increase productivity and economic efficiency by preventing bearing failures before they occur.

The inspection items written on the right are generally accepted methods for performing bearing maintenance and aftercare. Depending on the importance of the system or machinery being used, implementing inspection and maintenance by determining the inspection items and periodic inspection cycles is an important aspect of bearing maintenance and management.

1. **Inspect the bearings while the machine is operating**
   Check the temperature, sound, and vibration of the bearings. Examine the characteristics of the lubricant and determine the cycle for refilling or replacing the lubricant.
2. **Visually monitor the bearings**
   Carefully monitor any visible phenomena that appear when carrying out periodic inspections and after the bearings have been used. If there are visible signs of damage, take measures to prevent recurrence.

✻ Representative examples regarding bearing damage and preventative measures are illustrated below. Refer to the related catalog : Care and Maintenance of Bearings (Cat. No. 3017) for more details.

Photo A-5

- Tapered roller bearings
- Flaking has occurred on 1/4 of the inner ring raceway surface circumference, rollers and outer ring are discolored light brown
- Caused by an excessive high preload condition

Photo A-6

- Double row Angular ball bearing outer ring
- Flaking has occurred on 1/4 of the outer ring raceway surface circumference
- Caused by improper installation

Photo A-7

- Thrust ball bearing
- Flaking has occurred on the bearing shaft washer (bearing washer fitted on the side of the shaft) and rolling elements
- Caused by poor lubrication

Photo A-8

- Double row Tapered roller bearing outer ring
- Flaking has occurred on the raceway surface
- Caused by electrical damage
  (electric current passing thru bearing)

Indentation

Phenomena	Primary Causes	Primary Preventative Measures
Indentations (Brinell indentations) on the raceway surface caused by compaction of solid foreign materials and impact.	Intrusion of solid foreign materials High internal stresses on the flaking side Dropping, impact damage due to poor bearing handling	(1) Prevent intrusion of foreign material. (2) If caused by metal fragments, investigate the existence of flaking also occurring in other bearings. (3) Provide better filtration for lubrication system. (4) Improve bearing handling, method of assembly.

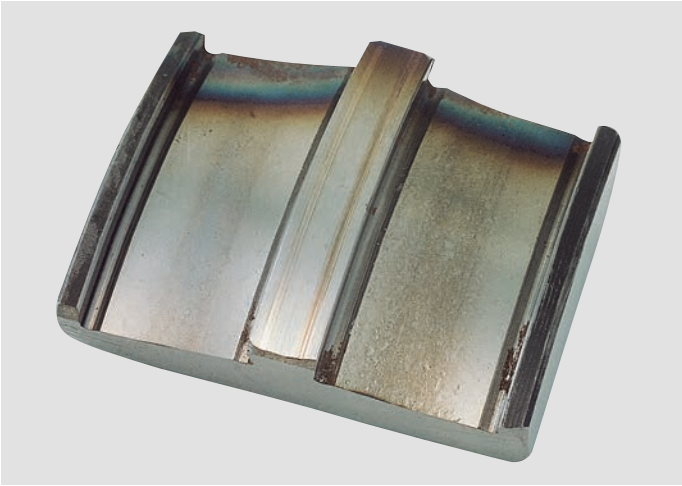

Photo B-1

- Spherical roller bearing inner ring (cut section)
- Indentation has occurred on one side of the raceway surface
- Caused by the compaction of solid foreign material

Photo B-2

- Spherical roller bearing rollers
- Indentation has occurred on the raceway surface
- Caused by the compaction of solid foreign material

Photo B-3

- Tapered roller bearing rollers
- Indentation has occurred on the raceway surface (temper coloration at both ends)
- Caused by intrusion of foreign material in the lubricant

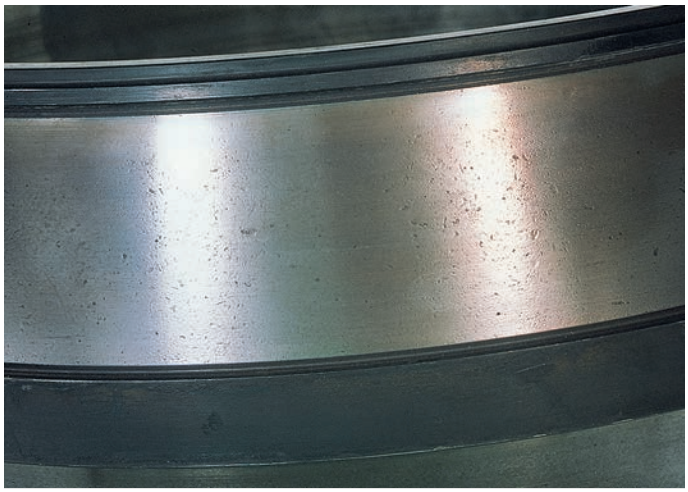

Photo B-4

- Tapered roller bearing inner ring
- Indentation has occurred on the raceway surface
- Caused by the compaction of solid foreign material

Chipping

Phenomena	Primary Causes	Primary Preventative Measures
Partial chipping	Compaction of solid foreign material Impact, excessive loading Poor bearing handling	(1) Investigate causes of impact, excessive loading and rectify/improve. (2) Improve bearing handling. (3) Improve seal performance.

Photo C-1

- Cylindrical roller bearings
- Chipping of inner/outer ring guide collar
- Caused by excessive impact load

Photo C-2

- Spherical roller bearing inner ring
- Chipping of collar section
- Caused by excessive impact load

Photo C-3

- Tapered roller bearing inner ring
- Extensive chipping of collar
- Caused by impact due to poor assembly

Photo C-4

- Double row tapered roller bearing inner ring
- End surface chipping
- Caused by impact due to poor bearing handling

Cracking

Phenomena	Main Causes	Main Preventative Measures
Fracture, cracking, hairline and friction cracking, etc.	Excessive load Excessive impact Heating and sudden cooling due to creep Excessive interference fit Extensive flaking	(1) Investigate causes of abnormal loading and rectify/ improve. (2) Prevent creep. (3) Reinvestigate the fit interference.

Photo D-1

- Spherical roller bearing inner ring
- Fracture of the raceway surface in the axial direction
- Caused by excessive interference fit

Photo D-2

- Photo D-1 fracture surface
- Source in the mid-section of the left-side raceway surface

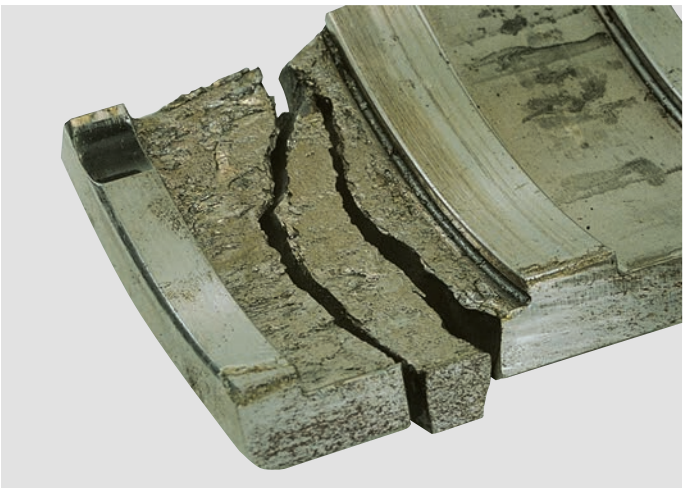

Photo D-3

- Four row cylinder roller bearing outer ring
- Fracture in the circumferential direction of the raceway surface
- Excessive flaking is the source of fracturee

Photo D-4

- Angular bearing outer ring
- Fracture in the circumferential direction of the raceway surface
- Caused by ball slipping due to poor lubrication

Bearing Seizure

Phenomena	Main Causes	Main Preventative Measures
Bearing has seized due to overheating and will not rotate. Discoloration, softening and welding of raceway, rolling element, and collar surfaces.	Poor heat dissipation Insufficient lubricant and/or lubricant is not suitable Bearing clearances are too small Excessive load (or preload) Roller skew, incorrect installation tolerances	(1) Improve heat dissipation. (2) Review lubricant type and volume. (3) Prevent misalignment. (4) Reinvestigate the bearing clearances and preload. (5) Reinvestigate the conditions of use.

Photo E-1

- Double row tapered roller bearing inner ring
- Discoloration, softening of inner ring due to seizure, and wear has occurred in a stepped pattern matching the roller pitch
- Caused by poor lubrication

Photo E-2

- Double row tapered roller bearing rollers
- Discoloration, scoring, and welding due to seizure has occurred on the surfaces and ends of the rollers and inner ring set shown in Photo E-1.

Photo E-3

- Spherical roller bearing outer ring
- Wear has occurred in a stepped pattern due to seizure of the raceway surface
- Caused by poor lubrication

Photo E-4

- Tapered roller bearing inner ring
- Raceway surface large diameter side and large collar surface have seized
- Caused by poor lubrication

False Brinelling, Fretting Corrosion

Phenomena	Main Causes	Main Preventative Measures
Red rust color from abrasion particles due to wear appear on the contact surfaces forming surface depressions. Depressions form at the pitch of the rolling elements on the raceway surface, which is also called false brinelling.	The bearing oscillation angle is too small. Insufficient lubricant (lubricant-free state) Load fluctuation Vibration during transportation Vibration, shaft deflection, installation error, insufficient fit interference	(1) Before transporting, preload the inner/outer ring separating packaging to prevent separation. (2) In case of an oscillating motion, use a higher consistency oil or grease. (3) Reinvestigate the lubricant type. (4) Secure the shaft and housing. (5) Re-evaluate the bearing shaft and housing fits.

Photo F-1

- Cylinder roller bearing inner ring
- False brinelling has occurred around the total circumference of the raceway surface
- Caused by vibration

Photo F-2

- Deep groove ball bearing inner ring
- False brinelling has occurred around the total circumference of the raceway surface
- Caused by vibration

Photo F-3

- Cylinder roller bearing outer ring
- Fretting corrosionn has occurred along the outer diameter

Photo F-4

- Tapered roller bearing outer ring
- Fretting corrosion has occurred along the outer diameter

Creep

Phenomena	Main Causes	Main Preventative Measures
The fitting surfaces on which creep occurs becomes polished, almost mirror like or cloudy surfaces. This may also be accompanied by scoring.	Insufficient interference fit	(1) Reinvestigate the fit interference. (2) Improve the machining precision of the shaft and housing.

Photo G-1

- Deep groove ball bearing inner ring
- Mirroring has occurred on the bore surface due to creep

Photo G-2

- Tapered roller bearing inner ring
- Scoring caused by creep has occurred in the center section of the bore surface

Photo G-3

- Thrust ball bearing shaft washer
- Scoring and also friction cracking have occurred caused by bore surface creep